ZMLUVA O DIELO

uzatvorená v zmysle § 536 a nasl. Zákona č. 513/1991 Zb. Obchodného zákona
medzi týmito stranami:

Objednávateľ:

Obchodné meno:	**CRT ELECTRONIC s.r.o.**
Sídlo:	č. 1080 029 57 Oravská Lesná - SK
Zastúpený:	Miloslav Czurilla – konateľ Ing.Martin Šipoš – prokurista Dipl. Ing.Blažena Czurillová - prokurista
IČO:	31 634 303
DIČ:	2020427288
IČ DPH:	SK2020427288
Bankové spojenie:	Slovenská sporiteľňa, a.s.
číslo účtu IBAN:	SK46 0900 0000 0000 5417 5033
SWIFT:	GIBASKBX
Poverený jednať vo finančných otázkach a pri riešení sporov:	Ing. Martin Šipoš – riaditeľ
Tel.:	+421 43 55066 36, +421 911 208 911
Fax:	+421 43 55066 99
E-mail:	martin.sipos@crt.sk
Poverený jednať v obchodno-technických otázkach:	František Vrábeľ – projektový manažér
Tel.:	+421 43 55066 63, +421 911 207 911
Fax:	+421 43 55066 99
E-mail:	frantisek.vrabel@crt.sk
Zapísaný:	v Obchodnom registri Okresného súdu Žilina, oddiel: Sro, vložka č. 2800/L

(ďalej aj „objednávateľ" alebo „zmluvná strana")

a

Zhotoviteľ:

Obchodné meno:	**AMTECH, spol. s r.o.**
Sídlo:	Bohuslava Martinů 941/41b, 602 00 Brno
Zastúpený:	Radek Nekarda - jednatel
IČO:	47905085
IČ DPH / DIČ:	CZ47905085
Bankové spojenie:	UniCredit Bank Czech Republic and Slovakia, a.s.
Číslo účtu:	2104173837/2700
IBAN:	CZ76 2700 0000 0021 0417 3837
SWIFT:	BACXCZPP
Poverený jednať v obchodno-technických otázkach:	Nikola Hrbek – sales manager
Tel.:	+420 541 225 215
Fax: -	
E-mail:	nikola.hrbek@amtech.cz
Zapísaný: u KS v Brně, oddíl C, vložka 9119	

(ďalej aj „zhotoviteľ" alebo „zmluvná strana")

Preambula

Zmluvné strany uzatvárajú tento Dodatok č. 2 k zmluve na základe výsledku zadávania zákazky s názvom zákazky **Časť 1: „3D_automatický optický inšpekčný systém (AOI)."** v súlade ustanoveniami Jednotnej príručky k VO a v Metodickom pokyne CKO č. 12 k zadávaniu zákaziek nespadajúcich pod zákon o verejnom obstarávaní.

Zhotoviteľ berie na vedomie, že realizácia predmetu zmluvy podľa čl. I tejto zmluvy bude financovaná na základe uzatvorenej Zmluvy o poskytnutí nenávratného finančného príspevku reg.č. 78/2020-2060-2230-V653 (ďalej aj „zmluva o poskytnutí NFP") v rámci Operačného programu Integrovaná Infraštruktúra, ktorá stanovuje zmluvné podmienky, práva a povinnosti objednávateľa ako prijímateľa nenávratného finančného príspevku (ďalej aj „NFP") a riadiaceho orgánu (Ministerstvo dopravy a výstavby Slovenskej republiky) ako poskytovateľa pri poskytnutí NFP zo strany poskytovateľa prijímateľovi.

I. Predmet Dodatku č.2 k zmluve

1. Doplnená príloha č. 1 k Zmluve_Opis predmetu zákazky s technickými parametrami zariadenia o relevantné doklady a preklady originálnych dokumentov v AJ do SJ alebo ČJ nasledovne:

   - Časť 1_Opis predmetu zákazky
   - Časť 1_TL_SJ3903DCSA_04E_3Di_LS2_Standard_Specification_CZ
   - Časť 1_TL_SJ3903DCSA_04E_3Di_LS2_Standard_Specification_AJ
   - Časť 1_Report_GRR_Type2Anova_R0603_ShiftY_CZ
   - Časť 1_Report_GRR_Type2Anova_R0603_ShiftY_AJ
   - Časť 1_Report_GRR_Type2Anova_R0603_ShiftX_CZ
   - Časť 1_Report_GRR_Type2Anova_R0603_ShiftX_AJ
   - Časť 1_Report_GRR_Type2Anova_R0603_Height_CZ
   - Časť 1_Report_GRR_Type2Anova_R0603_Height_AJ
   - Časť 1_Čestné prehlásenie_1
   - Časť 1_Čestné prehlásenie_2_CZ
   - Časť 1_Čestné prehlásenie_2_AJ
   - Časť 1_Seznam_servisnich_technik_a_objem_trzeb_za_servis

II. Ostatné ustanovenia

1. Ostatné ustanovenia Zmluvy o dielo na 3D_automatický optický inšpekčný systém (AOI) z 29.9.2021 v aktuálnych znení neskorších dodatkov zostávajú nezmenené a platné.
2. Tento Dodatok č. 2 nadobúda platnosť dňom jej podpisu oprávnenými zástupcami obidvoch Strán. Dodatok č. 2 k zmluve nadobudne účinnosť iba v prípade kladného výsledku administratívnej kontroly verejného obstarávania, tzn. iba v prípade doručenia Správy z administratívnej kontroly verejného obstarávania, v ktorej Poskytovateľ NFP deklaruje, že neidentifikoval nedostatky, ktoré by mali alebo mohli mať vplyv na výsledok VO alebo v rámci ktorej Objednávateľ súhlasil s výškou ex ante finančnej opravy uvedenej v návrhu správy z kontroly a splnil podmienky na uplatnenie ex ante finančnej opravy podľa MP CKO č. 5.. Po dodržaní tohto postupu Dodatok č. 2 k zmluve nadobudne účinnosť dňom nasledujúcim po dni doručenia právoplatnej správy z kontroly VO Objednávateľovi. V prípade záporného výsledku administratívnej kontroly tejto Zmluvy Poskytovateľom NFP sa zmluvné strany dohodli, že táto zmluva sa od počiatku zrušuje. Zhotoviteľ vyhlasuje, že si neuplatní u Objednávateľa žiadny nárok na prípadnú vzniknutú škodu.
3. Zmenu alebo doplnenie môžu zmluvné strany vykonať výlučne písomným dodatkom k zmluve, podpísaným obidvoma zmluvnými stranami.
4. Dodatok k Zmluve je vyhotovený v dvoch exemplároch, pričom každá zo zmluvných strán obdrží jedno vyhotovenie.

V Oravskej Lesnej, 14.12.2021

V Brně 14.12.2021

Za objednávateľa:

Za zhotoviteľa:

CRT ELECTRONIC s.r.o.
029 57 Oravská Lesná 1080
tel: 043-550 66 00
tel/fax: 043-550 66 99

.....
Ing.Martin Šipoš – prokurista

.....
Radek Nekarda – konateľ

AMTECH, spol. s r.o.
Bohuslava Martinů 941/41b
602 00 Brno
IČ: 47905085
DIČ: CZ47905085
Amtech

Prílohy:

Kompletný „Opis predmetu zákazky s technickými parametrami zariadenia" v rozsahu podľa kap. I. odst. 1 tohto dodatku

Opis predmetu zákazky + Technické parametre

I. časť zákazky:
Názov zákazky: 3D_automatický optický inšpekčný systém (AOI)

Obchodný názov zariadenia: 3Di-LS2

Výrobca: SAKI CORPORATION

Požadovaný technický parameter, resp. požadované vybavenie	Hodnotenie	Technický parameter, resp. vybavenie zariadenia
Rozmery DPS (doska plošného spoja) – šírka od 50 do 500 mm, dĺžka od 60 do 500 mm, ***Došpecifikovanie požiadavky:*** *Plnenie tejto požiadavky sa rozumie ako splnené vtedy, ak uchádzač uvedie hodnoty rozmerov DPS v nasledovnom intervale:* *šírka ≤50mm ÷ ≥500mm, dĺžka ≤60mm ÷ ≥500mm, alebo* *≤50mm (šírka) x ≤50mm (dĺžka) a ≥500mm (šírka) x ≥500mm (dĺžka)*	áno	Skutečná šířka od 50 do 500 mm, dĺžka od 60 do 510 mm. (technický list strana č.2 (PCBSize))
Hrúbka DPS ≥ 0,4 mm ***Došpecifikovanie požiadavky:*** *Plnenie tejto požiadavky sa rozumie ako splnené vtedy, ak uchádzač uvedie hodnotu hrúbky DPS v intervale od minimálne 0,4mm vrátane bez použitia dodatočných prípravkov na upevnenie DPS*	áno	Tloušťka 0,4 – 5,2 mm. (technický list strana č.2 (PCB Thickness))
Rozsah výšky komponentov na DPS na TOP DPS ≥40 mm, BOTTOM DPS ≥50 mm ***Došpecifikovanie požiadavky:*** *Plnenie tejto požiadavky sa rozumie ako splnené vtedy, ak uchádzač uvedie hodnoty výšky komponentov na DPS, ktoré dokážu prejsť interným dopravníkovým systémom zariadenia v intervale: TOP DPS ≥40mm vrátane a BOTTOM DPS ≥50mm vrátane*	áno	TOP DPS ≥40 mm, BOTTOM DPS ≥60 mm. (technický list strana č.2 (PCB Clearance))
Prechod DPS cez zariadenie v dopravníkovom systéme zľava doprava a zapojenie do linky (on line).	áno	Zleva doprava nebo zprava doleva. (technický list strana č.2 (Transfer Direction))
Automatické nastavenia šírky vnútorného dopravníka zariadenia	áno	Ano. (technický list strana č.2 (Width Adjustment))
Max. hmotnosť DPS ≥1kg	áno	Max. 12kg (technický list strana č.2 (PCB Weight))
Kompenzácia prehnutia DPS v osi Z minimálne v rozsahu ≥ 2mm BOTTOM / ≥ 2mm TOP (celkom ≥ 4mm)	áno	TOP = 5mm / BOTTOM = 5mm (technický list strana č.2 (Warpage Top / Bottom))
Kompenzácia zakrivenia DPS ***Došpecifikovanie požiadavky:*** *Plnenie tejto požiadavky s vyhodnotením "ANO" sa rozumie, ak má zariadenie funkciu kompenzácie zakrivenia DPS*	áno	TOP = 5mm / BOTTOM = 5mm (technický list strana č.2 (Warpage Top / Bottom))
3D kamerový systém, rozsah rozlíšenia kamerového systému ≤ 20µm	áno	18 µm (technický list strana číslo 3 (Resolution))
3D meranie + možnost merania pomocou bočných kamier pre kompletnú kontrolu DPS vrátane mŕtvych uhlov ***Došpecifikovanie požiadavky:*** Princíp 3D merania pomocou 2 moire projekcie alebo rovnocenná technológia pri dodržaní reprodukovateľnosti / zhodnosti metodiky merania a výsledkov nameraných hodnôt	áno	4x moire projekce (technický list strana číslo 3 (Camera)) 4x boční kamera (technický list strana číslo 4 (Side Camera))

Príloha č.1_Opis predmetu zákazky, časť 1

Detekcia cudzích materiálov na DPS	áno	ECD (technický list strana číslo 9 (Inspection Categories))
RGB osvetlenie v inšpekčnej hlave vo viacerých kanáloch, viacerých farbách a rôznych uhloch dopadu	áno	Red LED, Green LED, Blue LED (technický list strana číslo 3 (Lighting))
Rýchlosť merania ≥ 3 000 mm2/s pri použití všetkých projekcií a osvetlení	áno	5,700 mm2/sec (technický list strana číslo 9 (Image Capture Time))
Koeficient spôsobilosti meracieho systému R&R ≤ 10, ndc ≥ 5 ***Došpecifikovanie požiadavky:*** *Plnenie tejto požiadavky sa rozumie ako splnené vtedy, ak uchádzač uvedie konkrétne hodnoty R&R ≤ 10, ndc ≥ 5 alebo ekvivalentné štatistické hodnoty napr. presnosť, rozlišovacia schopnosť, opakovateľnosť v rozsahu ±3σ, resp. 6σ alebo predloží dôkazy z výpočtov a hodnotení týchto štatistických ukazovateľov zariadení*	áno	R&R ≤ 10, ndc ≥ 5 Viz. protokoly a letter of statement
Opakovateľnosť Cmk ≥ 2, resp. Cpk ≥ 1,67 ***Došpecifikovanie požiadavky:*** *Plnenie tejto požiadavky sa rozumie ako splnené vtedy, ak uchádzač uvedie konkrétne hodnoty Cm, Cmk ≥ 2, resp. Cp, Cpk ≥ 1,67 alebo predloží dôkazy z výpočtov a hodnotení týchto štatistických ukazovateľov zariadení*	áno	Cmk ≥ 2, resp. Cpk ≥ 1,67 (technický list strana číslo 9 (Capatibility))
Ukladanie 3D obrazu každej DPS	áno	Ano
Rýchle posudzovanie chýb	áno	Ano
Kompletné softvérové vybavenie zariadenia na prípravu, programovanie, optimalizáciu, monitorovanie a vyhodnocovanie procesu	áno	BF2-Monitor (Central Control System) Multi Process View (Operator Judgement Assistance System) BF-Logger (Inspection Information Output Function Software) BF-WebTracer II (Traceability System) BF-Manager (Barcode Management System) (technický list strana číslo 5 (Support System))
Možnosť dovybavenia zariadenia softvérovou podporou pre opravárenské pracovisko	áno	
Modul pre monitorovanie a štatistické spracovanie údajov	áno	
Automatické spracovanie a vyhodnotenie SPC údajov z procesu kontroly	áno	
Export výsledkov chýb a opráv pre štatistiku	áno	
Možnosť tvorby rôznych analýz a reportov, sledovanie kvalitatívnych trendov	áno	
Programovanie AOI zariadenia OFFLINE / ONLINE bez prerušenia výroby	áno/nie	Ano BF2-Editor SW
Synergické a pokročilé inteligentné riešenie / Kyber-fyzikálne systémy (CPS) – komunikačné softvérové rozhranie stroja kompatibilné s OFFLINE a ONLINE prepojením výsledkov merania s databázou výsledkov z 3D SPI kontroly (aj so zariadeniami 3D SPI od iných výrobcov)	áno	Ano
Synergické a pokročilé inteligentné riešenie / Autonómne manipulačné a intralogistické zariadenia – komunikácia SMEMA (komunikačný protokol pre komunikáciu s inými zariadeniami v linke, napr.):		
• komunikácia a riadenie vstupných a výstupných dopravníkov ku zariadeniu na automatickú medzioperačnú dopravu materiálu a výrobkov po kontrole bez zásahu obsluhy zariadenia...,	áno	Ano
• komunikácia a riadenie výstupných dopravníkov s automatickým triedením OK a NOK výrobkov po optickej kontrole a ich zaraďovaním do zásobníkov	áno	Ano
• systém pre automatické vyradenie označených DPS z procesu 3D kontroly	áno	Ano
Synergické a pokročilé inteligentné riešenie / Exponenciálne technológie:		
• 3D optická, bezdotyková kontrola kvality osadenia DPS komponentami a kvality spájkovania s prepojením na riadiací systém stroja,	áno	Ano
• traceability systém na výrobok (DPS) s možnosťou automatického čítania čiarových a 2D kódov z DPS internou kamerou zariadenia,	áno	Ano
Synergické a pokročilé inteligentné riešenie + Pokročilé inteligentné riešenia / Komplexné riešenie kybernetickej bezpečnosti zariadenia – SW ochrana voči kybernetickým útokom do riadiaceho systému stroja a programových aplikácií pri:		
• OFFLINE a ONLINE programovaní zariadenia,	áno	Ano
• nastavovaní a verifikácií nastavenia zariadenia,	áno	Ano
• ochrane údajov z monitorovania a riadenia procesu 3D kontroly	áno	Ano
• vzdialenom prístupe servisu do stroja cez internet...)	áno	Ano

Príloha č.1_Opis predmetu zákazky, časť 1

Napájanie 230V / 400V, 50 / 60 Hz, ± 10%	áno	~200V - 240V+/-10%, 50/60Hz 700VA (technický list strana číslo 2 (Electric Power Requirement and Power Consumption))
Pripojenie na stlačený vzduch 6 bar ± 1bar ***Došpecifikovanie požiadavky:*** *Plnenie tejto požiadavky s vyhodnotením "ANO" sa rozumie, ak je zariadenie skonštruované na pripojenie do rozvodov stlačeného vzduchu v intervale od 5 do 7bar vrátane*	áno/nie	0,5MPa = 5bar (technický list strana číslo 2 (Air Requirement))
Dodanie, inštalácia a uvedenie zariadenia do prevádzky	áno	ano
Návod na obsluhu a údržbu zariadenia	áno	ano
Osvedčenie o kompletnosti dodávky	áno	ano
Vyhlásenie o zhode podľa zákona č. 264/1999 v znení neskorších predpisov	áno	Ano, Stroj je certifikován dle legislativy a norem EU a označen značkou CE – typová certifikace. Vyhlášení o zhode podľa 264/1999 a EU bude dodáno ke stroji na konkrétni S/N při instalaci. (technický list strana číslo 3 (Safety Equipment, UL/CE Mark))
Značka CE	áno	
Východisková správa z prehliadky a skúšky elektrického zariadenia podľa vyhlášky 508/2009 v znení neskorších predpisov	áno	Ano
Zaškolenie personálu na obsluhu a preventívnu údržbu zariadenia v slovenskom alebo českom jazyku	áno	ano
Servisná podpora do 24 hodín od nahlásenia poruchy zariadenia v slovenskom alebo českom jazyku ***Došpecifikovanie požiadavky:*** *Plnenie tejto požiadavky sa rozumie ako splnené vtedy, ak uchádzač zabezpečí bezodkladné poskytnutia odbornej konzultácie, diagnostiky stroja pomocou vzdialeného prístupu cez internet, v prípade nutnosti ale na základe vzájomnej dohody medzi obstarávateľom a uchádzačom aj vycestovanie ku stroju za účelom poskytnutia odbornej servisnej podpory na odstránenie poruchy zariadenia kompetentným servisným technikom komunikujúcim v slovenskom alebo českom jazyku do lehoty 24 hodín od písomného nahlásenia požiadavky (napr. mailom, SMS...) počas 7dni v týždni na všetkých troch pracovných zmenách.*	áno	Ano Viz. příloha seznam servisních techniků a objem tržeb
Vzdialený prístup cez internet ***Došpecifikovanie požiadavky:*** *Plnenie tejto požiadavky sa rozumie ako splnené vtedy, ak uchádzač zabezpečí bezodkladný vzdialený prístup do riadiaceho systému stroja cez internet za účelom vykonania diagnostikácie zariadenia na základe vzájomnej dohody a s pridelením oprávnení na prístup medzi obstarávateľom a uchádzačom do lehoty 24 hodín od písomného nahlásenia požiadavky (napr. mailom, SMS...) počas 7dni v týždni na všetkých troch pracovných zmenách.*	áno	ano
Záruka 24 mesiacov	áno	ano

Dátum vypracovania cenovej ponuky: 9.8.2021

Vypracoval + kontaktné údaje: Nikola Hrbek (nikola.hrbek@amtech.cz, +420 777 266 322)

Obchodné meno uchádzača a sídlo: AMTECH, spol. s r.o., Bohuslava Martinů 941/41b, 602 00 Brno

IČO: 47905085

Platca DPH: Ano, CZ47905085

Podpis: Nikola Hr

Specification No. ccccccc-aann-yyyymmdd

(Saki Document No. SJ3903DCSA-04E)

3D PCB Inspection System Standard Specification

3Di-LS2

Delivery Destination

Company Name

Person in Charge

Confirmation Sign by Customer

BF Software Ver. : x.xxxxxxxxxx

Approved by	Created by

Created on 4th September, 2019

Saki Corporation

©2019 Saki Corporation. All rights reserved.

1. 3Di-LS2 Hardware Specification

Dimensions	1040 W x 1440 D x 1500 H mm (40.94 W x 56.69 D x 59.06 H in.) (*1)	
Weight	Approx. 900 Kg (1984.16 lbs)	
Color	Standard color:	Medium gloss white satin (Munsell N8.5)
		Medium gloss silver flat (Approximate color: Munsell N7.5)
Usage Environment	15℃(59F) - 30℃(86F) / 15 - 80%RH (Non-condensing)	
Electric Power Requirement and Power Consumption		Single-phase ~200V - 240V+/-10%, 50/60Hz 700VA
		Cable 5 m with a plug
Noise Level	60 dB(A)	
Air Requirement	0.5 MPa @ ≥5L/min (ANR)	HIGH COUPLER 20PM (NITTO KOHKI)
Target PCB	PCB Size	7μm Camera Head: 50 W x 60 L - 330 W x 330 L mm (1.97Wx2.36L–12.99Wx12.99L in.)
		12/18μm Camera Head: 50 W x 60 L - 500 W x 510 L mm (1.97Wx2.36L–19.68Wx20.07L in.)
	PCB Thickness	0.5 - 5.2 mm (0.02 - 0.20 in.) (*2)
	PCB Weight	12 kg (26.46 lbs) or less
	Material	Glass Epoxy, Paper Phenol, Ceramic
	Warpage Top / Bottom	7μm camera head: ±1mm (0.019 in.) or less (total 2mm)
		12μm camera head: ±2mm (0.039 in.) or less (total 4mm)
		18μm camera head: ±5mm (0.078 in.) or less (total 10mm)
	PCB Clearance	Top: 40 mm (1.57 in.), Bottom: 60 mm (2.36 in.) (*3)
	Fiducial Mark	One mark at any corner and another at opposing corner (total two marks and above)
Transfer Conveyor	Height	880 - 965 mm (34.65 - 37.99 in.)
	Method	Flat belt transfer
	Transfer	With adjustable-speed function
	PCB Setting	Clamp at rail transfer width
		Clamp width is 3 mm-wide (0.12 in.-wide) at each side (*4)
	Width Adjustment	Auto Width Adjustment
	Transfer Direction	Left to Right / Right to Left (*5)
	Machine Origin	Rail 1 (Fixed)
	Movable range of rail	The second rail adjustable: 50 - 500 mm
	Belt	Flat belt SE-A-PB (NITTA)

(*1) If a PCB transfer side is 900 mm, height from floor to top of signal tower is 1930 mm. The monitor and keyboard arm are not included.
(*2) PCB Thickness includes PCB warpage.
(*3) When the warpage occurs in the board, the sum of warpage amount and component height need to be smaller than top clearance.
(*4) Clamp width can be changed to 2mm-wide(0.08 in.-wide) or 4mm-wide(0.16 in.-wide) at each side.
(*5) The factory default setting is "Left to Right". For "Right to Left" direction, setting is changed at the time of installation.

©2019 Saki Corporation. All rights reserved.

	Board Detecting Point	Detect the Board Width x 0.2[mm] point from front rail

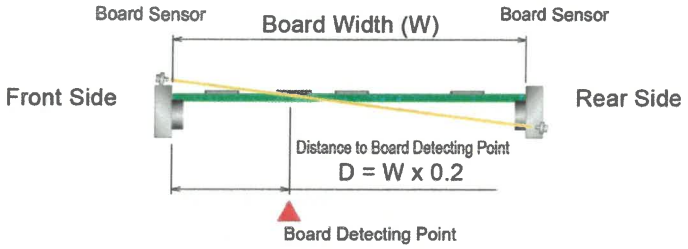

Optical System	Lighting	2D lighting system: Red LED, Green LED, Blue LED (*1)
		3D lighting system: White LED (for profilometry) (*2)
	Camera	CMOS area camera - 4 projectors moire
	Resolution	7μm, 12μm, 18μm
	Imaging	FOV camera gantry (*3)
	FOV size	7μm Camera Head : 22 W x 29 L mm (0.87 x 1.14 in.)
		12μm Camera Head : 36 W x 42 L mm (1.42 x 1.65 in.)
		18μm Camera Head : 41.5 W x 41.5 L mm (1.63 W x 1.63 L in.)
Communication Feature	Network I/F	Ethernet 1000BASE-T
Signal Tower	Model Number	LD6A-3KQW-RYGC (IDEC)
	Color Specification	Red, Yellow, Green from above
	Display	Dependent to operation mode
	Operation Mode	Automatic operation mode, Automatic operation ended,
		Automatic operation stopped, Manual mode
	Display Method	Signal tower: lighting, blinking
Alarm	Buzzer	EB-1124 (Panasonic Electric Works)
Upstream / Downstream	Connector	SMEMA (AMP) (*4)
Connection	Upstream Machine	READY signal (Dry contact), BUSY signal, OK/NG signal
	Downstream Machine	READY signal, OK/NG signal (Dry contact),
		BUSY signal (Dry contact)
Safety Equipment	Power Switch	T0-1-102/EA/SVB-SW (Moeller, UL/CE mark compliance product)
		On lock and off lock are available.
	Door Switch	D4NS-1AF (OMRON, UL/CE mark compliance product)
	Emergency Stop Switch	A22E-M-01 (OMRON, UL/CE mark compliance product)
	Breaker	NV30-FAU-2P-20A-240V-30mA
		(Mitsubishi Electric, UL/CE mark compliance product)
	Residual Pressure Relief Valve	HV6-02 (PISCO)

(*1) CoaxialtopLight: Red LED, TopLight: Red LED, SideLight: Blue LED, Green LED, Red LED, and LowLight:Red LED.
(*2) Height differences can be measured by projecting stripe patterns.
(*3) The camera and PCB table move to capture each FOV.
(*4) Two kinds of connection methods are available by using ancillary conversion cables. For details, refer to the Upstream / Downstream I/F specification diagram and select when ordering. If you prefer the other connector or other connection method, please contact us.

©2019 Saki Corporation. All rights reserved.

PC Specification	OS	Windows 10 IoT Enterprise 64bit English Edition (Microsoft) (*1)	
	Memory	7μm	:64GB
		12μm	:32GB
		18μm	:32GB
	CPU	Core i7-8700 3.2GHz (Intel) or higher	
	Hard Disk Drive	1TB×2 Raid 1 Configuration (for System disk and Data disk)	
	Auxiliary Storage Unit	DVD-R/RW drive	
	Keyboard	104 English keyboard	
	Mouse	Optical Microsoft-compatible type mouse	
Display	Screen Size	24-inch LCD monitor	
	Screen Resolution	WUXGA (1920×1200) 24-bit full color	
Self-diagnosis function	Accuracy diagnosis, Predictive and preventive maintenance		
Manufacturing Option (*2)	Side Camera	Camera	4x CMOS Area camera
		Resolution	18μm
		Imaging	FOV camera gantry
		FOV Size	36 W x 18 L mm (1.42 x 0.71 in.)
		Inspectable Components	J lead, QFN, Connectors with cover
		Inspection Categories	Absence of solder, Insufficient solder, Excess Solder, Bridge
		Inspection Method	Inspection starts right after capturing image of every FOV. Components, that cannot be seen from above direction, can be captured by 4 direction cameras.
		Inspection Images	Images by angled lighting (top/side/low) Color image by side lighting
	Slide board guide	For taking out PCB directly from the inside of machine	
	Touch panel	24-inch touch panel LCD monitor	
	Conveyor Reference Position	The 1st lane position is shifted 160mm backward.	
Additional Option (*3)	External Bar-code Reader (for auto model change)		
	Journal printer (for traceability)		
	UPS	Power will be supplied to PC for about 10 minutes during power interruption. PC and monitor need to be power off normally during power supply from UPS	

(*1) OS language is English. Language on basic operation screen for the inspection system can be arranged either with Japanese or English.
(*2) Customer can select when ordering.
(*3) Customer can order even if after manufacturing is completed.

©2019 Saki Corporation. All rights reserved.

	Point sub backup	For large board (Support the middle of PCB with 2 points.)
	Line sub backup	For large board (Support the middle of PCB with plate.)
	M2M Function	FeedBack/FeedForward functions and system connection between Solder Printing Machine or Mounting Machine. (*1)
	Data Converting	ODB++ import is available. (*2)
Support System	BF2-Editor (Offline Teacher)	
	BF2-Monitor (Central Control System)	
	Multi Process View (Operator Judgement Assistance System)	
	BF-Logger (Inspection Information Output Function Software)	
	BF-WebTracer II (Traceability System)	
	BF-Manager (Barcode Management System)	

(*1) For the corresponding manufacturers, please contact Saki Corporation.
(*2) Importing is possible up to ODB++ Ver 8.1. For other versions, please contact Saki Corporation.

©2019 Saki Corporation. All rights reserved.

System Appearance Diagram

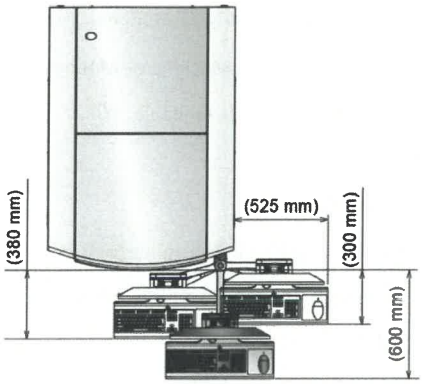

Top View

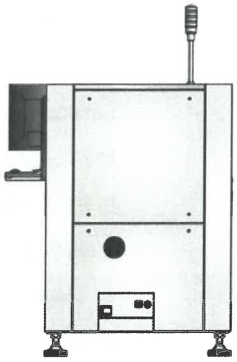

Rear View

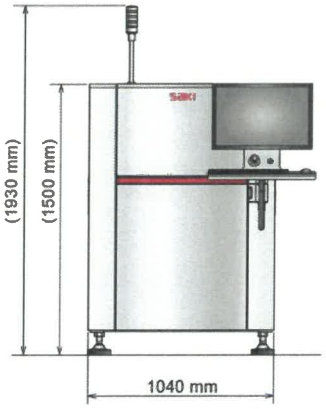

Front View

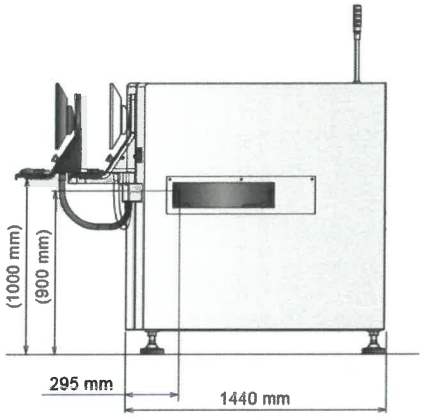

Side View

©2019 Saki Corporation. All rights reserved.

Air Coupler Connection Specification

The air connecting port is connected to the bottom side of the front of the unit.

Connecting Port of Inspection Unit Side	HIGH COUPLER 20PM (NITTO KOHKI)
Recommended Plug	HIGH COUPLER 20SH (NITTO KOHKI)

Power Supply Plug

WF8420K (Panasonic Electric Works)

The plug in the above is connected to the tip of the cable whose length is 5 m from the bottom side of the back of the unit.

A single-phase 200 - 240V is recommended. When it is connected to the three phase, please consult us separately.

Warning: Please make sure that the outlet FG terminal at the factory equipment is properly grounded at the time of system installation.

©2019 Saki Corporation. All rights reserved.

Upstream / Downstream Stages I/F Specification

Connector in machine side	206043-1 (AMP)
Contact in machine side	66105-1 (AMP)

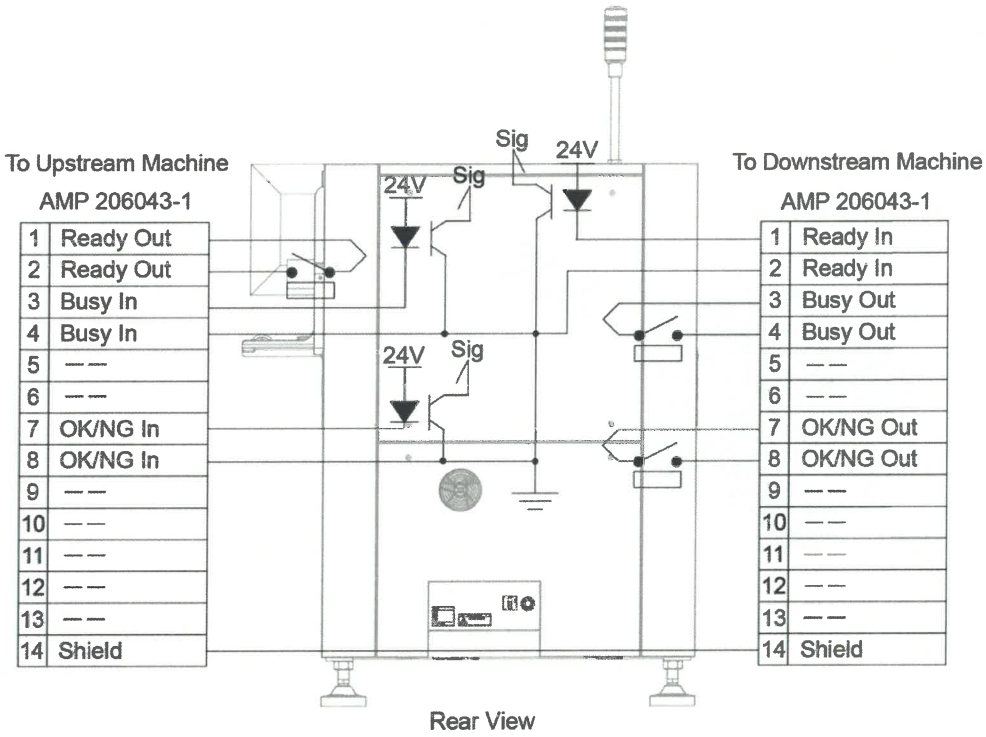

Accessory Cable Specification for I/F Connection

The following 2 kinds of cables for Upstream / Downstream machine are available.

Please specify either of them when ordering.

(1) SMEMA-standard Specification

Pin Array	Ready Out / Ready In	No.1, 2 pin
	Board Available (Busy In / Busy Out)	No.3, 4 pin
	Failed Board Available ((OK/NG In) / (OK/NG Out))	No.7, 8 pin
	Shield	No.14 pin
Connector	206044-1 (AMP)	
Contact	170246-1 (AMP)	

(2) MOLEX Connector Conversion Specification

Convert by cable to support.

Pin Array	Upstream	Ready Out	No.1, 4 pin
	Downstream	Ready In	No.1, 3 pin
		OK/NG Out	No.2, 4 pin
Connector		1490P-04P1 (MOLEX)	
Contact		1380TL (MOLEX)	

©2019 Saki Corporation. All rights reserved.

2. Inspection Capability

Applicable Process	Assembled component inspection before reflow process	
	Solder inspection after reflow process	
Inspectable Components	0201 mm (008004 in.) packages and up (7μm camera head), 0402 mm (01005 in.) packages and up (12μm and 18μm camera head), Diodes, Tantalum Capacitors, Aluminum Electrolytic Capacitors, Module chips, Transistors, Power transistors, MELF resistors, Filters, Special-shaped components, Connectors (0.4mm pitch and up), QFP, SOP, CSP, BGA (0.4mm pitch and up), and Solder joints viewable from vertical top (*1)	
Inspection Categories	Presence/Absence, Misalignment, Tombstone, Reverse, Polarity, Bridge, Absence of solder, Insufficient solder, Lifted lead, Lifted chip, and Fillet defect, ECD Each defect name can be arranged freely by the system function. (*2)	
Inspection Method	Inspections are processed after capturing each FOV. Height differences are detected by projecting stripe patterns from four directions at the maximum.	
Inspection Images	Images taken by different angle lightings (CoaxialtopLight, TopLight, SideLight, LowLight), color images taken by SideLight, visualized height information, and composite of those images	
Data Import	From CAD data, Mount data, or NC data	
Fiducial Mark	Shape	Circle, Square, Triangle, Rhomboid
	Offset Calculation	Two-point, Three-point
Tact Time	Tact time is calculated by adding image capturing time and PCB loading/unloading time. (*3) (*4)	
	(A) Image Capturing	7μm camera head: Approx. 600 ms/FOV. 12μm camera head: Approx. 420 ms/FOV 18μm camera head: Approx. 300 ms/FOV
	(B) PCB Loading/Unloading	Approximately 4 sec.
Image Capture Time	7μm camera head:	1,063 mm^2/sec
	12μm camera head:	3,600 mm^2/sec
	18μm camera head:	5,700 mm^2/sec
Measurable Height	7μm camera head:	4 mm (8.82 in.) or less
	12μm camera head:	10 mm (0.39 in.) or less
	18μm camera head:	20 mm (0.79 in.) or less
Measurement Accuracy	Height Resolution	1μm
	Height Inspection Repeatability	2μm (3σ) or less (*5)
	XY Repeatability	3μm (3σ) or less
Capatibility		Cmk ≥ 2, Cpk ≥ 1,67

(*1) J lead fillet for PLCC and BGA/CSP bottom solder joints are excluded from inspectable categories. Side camera(optional function) enables to inspect materials that cannot be seen from just above such as the solder fillet of J leads.
(*2) Inspection categories are limited to items viewable on inspection images.
(*3) Calculation and image capturing are processed at the same time. If the inspection data is heavier, the calculation time becomes longer.
(*4) Image Capturing time and PCB Loading/Unloading time are for reference purpose only.
(*5) By using Saki's Height calibration jig. When using 2500μm height jig, repeatability is 2μm (3σ) or less. When using 8000μm height jig, repeatability is 10μm (3σ) or less.

©2019 Saki Corporation. All rights reserved.

Inspection Result Output	Screen display of defect locations
	File output of defect details
	Image output of defective area
	Network output of the above files
Recognizing Ability	OCR function, 1D barcode, 2D barcode

©2019 Saki Corporation. All rights reserved.

3. Standard Accessories

Manual and Programming Manual	1each
USB License Key	2
System Recovery Disk	1
External Hard Disk Drive for Storing the System Image	1
Work Conveyor Belt (Spare)	2
Interface Cable to Connect with Upstream / Downstream Machine (2 meters)	1 each

4. Installation Condition

For the maintenance of the machine, secure a space for opening the front door (see the figure below).

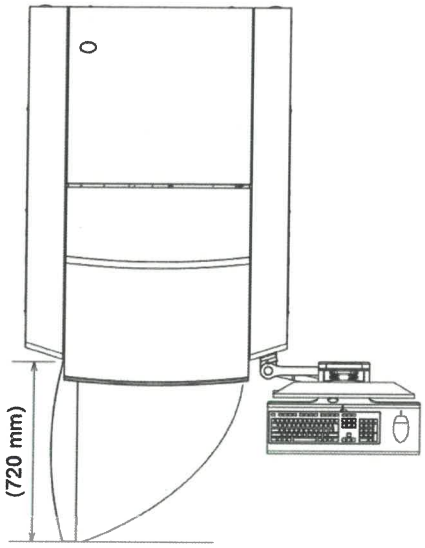

Top View

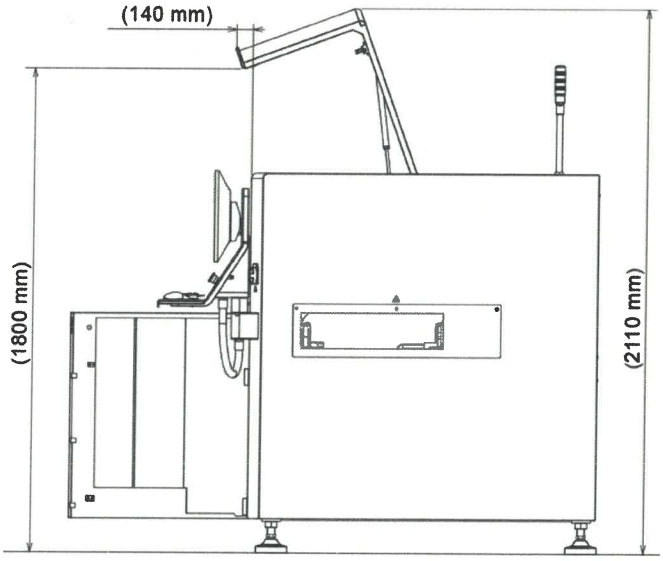

Side View

©2019 Saki Corporation. All rights reserved.

5. Acceptance Inspections

Following items shall be checked / verified by Saki service personnel at the time of installation for your acceptance of the purchased system.

- Conveyor carrying in/carrying out operation (OK/NG)
- Inspection operation (OK/NG)
- Height measurement by using Saki's Height calibration jig (OK/NG)
- Image loading operation (OK/NG)
- Position check against glass board (OK/NG)
- Luminosity check against gray scale (OK/NG)

6. Warranty Period

SAKI guarantees to customer that the system is adapted to the quality such as construction, functionality, performance, security and the like separately set forth in this specification sheet for a period of 1 year after completion of acceptance inspection ("Warranty Period"). During the Warranty Period, against any trouble which Saki is liable for, Saki will provide the Technical Support stipulated in Clause 2 of Article 2 of the Terms and Conditions for technical Service for free of charge along with the Terms and Conditions for technical Service.

As for the technical service including the Technical Support after the Warranty Period, Saki may offer the Fare-paying Service along with the Terms and Conditions for technical Service. Please contact us for the details.

©2019 Saki Corporation. All rights reserved.

7. Terms and Conditions for Technical Service

Article 1 (Purpose) This terms and conditions (hereinafter "Terms and Conditions") is to stipulate the agreement between Customer and SAKI about the services to maintain normal action and operation of the objective equipment and its system option which Saki Corporation or its related company (hereinafter "SAKI") sales (hereinafter "**Product**").Customer may use the Product only in case agrees with this Terms and Conditions.

Article 2 (Definition) The definition of each service menus which SAKI provides are as below;

(1) **Hardware Periodical Maintenance**
Service in relation to periodical check for the objective hardware of the Product (hereinafter "**Objective Hardware**") written on the Individual Contract.

(2) **Software Periodical Maintenance**
Service in relation to periodical check for the software of the Product (including the Fare-Paying Software of (8) of this Article, hereinafter "**Objective Software**").

(3) **On-call Service**
Service in relation to a survey, checkup, and maintenance of the Product or the system option connected to the Product which is not included in the (1) and (2) above and provided over a phone.

(4) **On-line Service**
Service in relation to a survey, checkup, and maintenance of the Product or the system option connected to the Product which is not included in the (1) and (2) above and provided by monitoring or remote controlling the Product, the system option connected to the Product, other electronic devices and the like (hereinafter "**Connection Media**") through the system which SAKI indicates (hereinafter "**Remote System**") to show how to use the Product or the system option connected to the Product (hereinafter "**Remote Monitoring**").

(5) **On-site Service**
Service in relation to a survey, checkup, and maintenance of the Product or the system option connected to the Product which is not included in the (1) and (2) above and provided by visiting the Installation site of the Product and the system option connected to the Product when SAKI assumes the trouble is not able to be solved only with (3) and (4) above.

(6) **Training**
The service in relation to give explanation, instruction, and teach how to use the Product or the system option connected to the Product through the Remote Monitoring, teaching video (DVD), or at the place where SAKI indicates.

(7) **Inspection Data Support**
The service in relation to a support to make the inspection data of the Product through the Remote Monitoring, or at the place where SAKI indicates.

(8) **Fare Paying Software**
Selling of the fare-paying software which SAKI provides.

(9) **Service Parts**
Selling of the service parts which SAKI provides.

2. The service (1) and (2) above shall be referred to as "**Periodical Maintenance**" and the service (3), (4), and (5) above shall be referred to as "**Technical Support**" and the service from (1) to (9) above shall be referred to as "Service" in this Terms and Conditions.

3. The details, such as contents of the Periodical Maintenance, charge and so on, shall be stipulated separately by SAKI.

4. Individual service menu which SAKI provides to Customer shall be stipulated in the individual contract which is completed by the fact that Customer issues an order to SAKI in a manner predefined by SAKI and SAKI accepts the order (hereinafter "**Individual Contract**").

5. Customer shall agree that (a) providing the Periodical Maintenance and the Technical Support does not guarantee prompt response from SAKI, entire operation of the Product, or entire recovery of troubles, and (b) the inspection data which is made thorough (6) Training and (7) Inspection Data Support above does not guarantee the accuracy of the inspection and its improvement.

Article 3 (Periodical Maintenance) In case Customer purchases the Periodical Maintenance in the Individual Contract, SAKI shall visit Customer once per 6 months to provide the Periodical Maintenance during the term as written in the Individual Contract. One visit shall 8 hours at the maximum and its schedule shall be informed by SAKI to Customer one month before and decided through mutual consultation between Customer and SAKI.

Article 4 (Reception time and service time for On-call Service and On-line Service) The reception time and service time for the On-call Service and On-line Service shall be as below. However, in case of Saturday, Sunday, national holiday or other date which SAKI indicates as holiday, SAKI shall not provide the On-call Service.

- Reception time: From Monday to Friday AM 9:00 to PM 5:00 (time of the place where SAKI(who provide the Service)'s office is located)
- Service time: From Monday to Friday AM 9:00 to PM 5:00 (time of the place where SAKI(who provide the Service)'s office is located)

2. In case Customer requests SAKI to provide the On-call Service or On-line Service at the time other than the date and time of preceding section, this request shall be assumed as the request received in the next working day by SAKI, and SAKI shall provide the On-call Service or On-line Service in the time stipulated in the preceding section of the next working day. However, in case SAKI judges the degree of importance and urgency is high, SAKI may provide the On-call Service or On-line Service at the time other than the preceding section with the additional charge as stipulated in the appendix.

Article 5 (Reception time and service time for On-site Service)
The reception time and service time for the On-site Service shall be as below. The fee for the On-site Service is as stipulated in the appendix. However, in case of Saturday, Sunday, national holiday or other date which SAKI indicates as holiday, SAKI shall not provide the On-site Service.

- Reception time: From Monday to Friday AM 9:00 to PM 5:00 (time of the place where SAKI(who provide the Service)'s office is located)
- Service time: From Monday to Friday AM 9:00 to PM 5:00 (time of the place where SAKI(who provide the Service)'s office is located)

2. In case SAKI judges the degree of importance and urgency of a trouble is high, SAKI may provide the On-site Service at the date and time other than the date and time of preceding section with the additional charge as stipulated in the appendix. In case SAKI provides the On-site Service on the several time blocks stipulated in the appendix, only the highest Accommodation fee and Allowance shall be applied.

Article 6 (Remote Monitoring) Customer shall agree the following terms to be provided the Remote Monitoring;

(1) To follow all the terms of service and other rules which the third party who provides the Remote System stipulates,
(2) To prepare the Connection Media and an internet connection which are necessary for the Remote Monitoring by its own cost and responsibility,
(3) To acknowledge that there is a possibility that any wrong function and wrong operation screen which is different from Customer's intention might be activated or shown due to the Remote Monitoring,
(4) To acknowledge that there is a possibility that the Remote Monitoring is not be able to use due to the situation of the Product, the system option connected to the Product, or the internet connection,
(5) To manage the information which is sent from SAKI by an e-mail to use the Monitoring System (hereinafter "Login Information") under its own responsibility, and
(6) To use the Monitoring System under its own responsibility, and to indemnify and hold SAKI and its related companies harmless from and against all claims, losses, liabilities or obligations arising as a result of such use/ inoperative of the Monitoring System, lose of data due to computer virus, and any other damage occurred including (3), (4), and (5) of this Article above.
(7) SAKI may introduce antivirus software based on the Customer's request. In case Customer uses any antivirus software, Customer shall use and maintain any antivirus software and the Product which antivirus software is installed under its own liability and SAKI shall not have any obligation to guarantee certain and collect operation of such antivirus software and the Product which antivirus software is installed.

Article 7 (Charge for Maintenance Service) The terms of the payment from Customer to SAKI shall be stipulated in the Individual Contract.

2. The charge for the Service shall not refund for any reason whatsoever.
3. SAKI may change the charge of the Service considering the market situation, economic situation, commodity price and the like.

Article 8 (Customer Expense) Customer shall burden the costs as below other than the charge stipulated in the preceding Article.

(1) electricity and water rates
(2) cost occurred related to any communication device (including phone, the Connection Media, and the like), and an internet connection
(3) parts price (excluding the selling of (9)Service Parts of Article 2) and the its transportation cost

Article 9 (Title of Exchanged parts) The title of the faulty parts which are exchanged through the Periodical Maintenance and the Technical Support shall belong to SAKI.

Article 10 (Reconsignment) SAKI may consign all or a part of the Service to any third party with notification to Customer.

Article 11 (Maintenance of Installation Condition) Customer shall always adjust and maintain the installation condition of the Product to meet the condition defined in instructions for handling (e.g. power sources, temperature, humidity, vibrations, magnetisms, saltiness, grounding conditions, etc.).

Article 12 (Objective Software) Customer may use the Objective Software only for the appropriate use of the Objective Hardware and this License of use of the Objective Software shall be non-exclusive and non-assignable license.

2. The Copyright of the Objective Software and any output made through the Objective Software shall be owned by SAKI, and Customer shall not be granted the Copyright nor other rights. Saki shall not provide any guarantee that the Objective Software does not infringe any third parties' right including but not limited to the copyright and the like.
3. SAKI may modify specifications or contents, and alter distribution method of Objective Software without making any prior notice to and without obtaining agreement with Customer. This terms and condition shall also be applicable to the software produced by modifying specifications or contents and altering distribution method of the Objective Software.
4. In case trouble, damage etc, are caused by updating, adding of function and the like to the Objective Software by SAKI, SAKI shall restore it before updating, adding of function and the like. Next action after the restoration shall be decided through mutual consultation between Customer and SAKI.

Article 13 (Cooperation) Customer shall agree following terms to be provided the Service smoothly by SAKI.

(1) to do the maintenance which is stipulated to be done by Customer in the appendix
(2) to keep the log book of the Product and disclose the log book when SAKI requires
(3) to try its best effort to organize the circumstances so that SAKI is able to access the Product and other external network freely during SAKI's performance of the Service
(4) to try its best effort to assign Customer's employee who is familiar with the Product as the window person for the Service and
(5) (in case the Product is X-ray product) to recognize the Product shall have checked periodically by the qualified person according to the legal standard and cooperate with its check

Article 14 (Information) SAKI may collect, use, process, store, and utilize the information which SAKI obtains from Customer through the execution of the Service according to the Privacy Policy to improve and enhance SAKI's Product including the Service.

Article 15 (Beta Service) SAKI may make available a "beta" version of the Service (hereinafter "Beta Service") for evaluation and feedback by third parties. In case Customer requests the Beta Service, Customer shall agree with the following terms;

(1) Not to use the Beta Service for the purpose other than the evaluation and feedback.
(2) To agree that Beta Service may contain bugs, errors, and other problems, use the Beta Service with the care of a good manager, and not to claim the damages which are occurred due to the Beta Service against SAKI.
(3) Not to use the Beta Service for illegal purpose, or other purpose which would cause trouble or other damage against a third party's tangible/intangible property, and
(4) To provide all of the data and feedback of test and evaluation of the Beta Service to SAKI for free of charge.

Article 16 (Prohibited Activities) Customer shall not make any activities defined in following each paragraph.

(1) to alter the Objective Hardware
(2) to repair, alter, or decompose the Objective Hardware or replace the parts thereof unjustly
(3) to rent, lease, or transfer the Objective Hardware to any third party without permission from SAKI
(4) to copy or alter a part or all of the Objective Software
(5) to use the Objective Software outside the scope of the license defined in Clause 1 of Article 12
(6) to install and use the Objective Software in other products which is out of this Terms and Conditions
(7) to rent, lease, transfer or re-license the Objective Software to any third party without permission from SAKI
(8) to try to analyze, change the source code of the Objective Software and the like by reverse engineer, disassemble or decompile and the like a part or all of the Objective Software
(9) to make software and derivation similar to the Objective Software;
(10) to insert the service key which unlocks the interlock of the Product (hereinafter "Service Key") at the time of being provided the Remote Monitoring, and
(11) to have any third party make activities defined in each previous paragraph.

Article 17 (Indemnities) If the events defined in following each paragraph should occur, SAKI shall be released from the duty of providing the Service and compensating any damages occurring on Customer by each event, or any and all other duties.

(1) In the event that Customer should make the prohibited activities defined in the previous Article,
(2) in the event that the installation condition of the Product defined in the Article 11 should not be met,
(3) Trouble, damage etc, caused by the change of installation site or removal of the Product after its delivery.
(4) Trouble, damage etc, caused to consumable parts of the Project,
(5) Trouble, damage, etc, caused by or related to any device other than the Product,
(6) Trouble, damage, etc, caused by stolen or loss,
(7) In the event that Customer should decompose or repair the Product or replace the parts thereof without permission from SAKI,
(8) Trouble, damage etc, caused by use or inoperative of the Product,
(9) Trouble, damage etc, caused by using the Objective Software together with any other software,
(10) Trouble, damage, etc, caused by computer virus,
(11) Trouble, damage etc, caused by making change or update of the BIOS, drivers, or OS without a confirmation by SAKI,
(12) Trouble, damage etc, caused by operation in any environment other than the recommended environment of the Product,
(13) In case any and all data which the Objective Software outputs are lost,
(14) In the event that Customer should commit any breach of instructions for use and for handling of the Product defined by SAKI,
(15) In the event of force major such as fire, earthquake, lightning strike, wind and flood damage, gas damage, salt damage, and other act of providence, war, armed conflict, etc occurs,
(16) Trouble, damage, etc, caused on the Product by the events which are other than the events defined in each previous paragraph and not for reasons attributable to SAKI, and
(17) In the event any defect is found or any trouble or damage occurs after the term or termination of the period stipulated in the Individual Contract.

Article 18 (Data Save) Customer shall acknowledge that inspection data or other data may be lost by a certain trouble or damage, and shall try to save data at new creation and every updating under its responsibility. SAKI shall not be liable for the responsibility about such loss of data.

Article 19 (Cancellation of Agreement) In case the other party corresponds to one of the following each paragraph, either party may have the right to immediately cancel the Individual Contract without requiring any notice regardless of the preceding article:

(1) In case the other party breaches one of the paragraphs stipulated in this terms and condition and does not correct the breach in spite of the notice defining the reasonable period
(2) In case the other party is subjected to punishment for revoking or suspending business by the supervisory authorities
(3) In case the other party suspends payment, or is subjected to punishment for dishonor of the clearinghouse
(4) In case the other party is subjected to attachment, provisional attachment, provisional disposition, compulsory execution, and the like by any third parties
(5) In case the other party offers or makes a procedure for bankruptcy, company liquidation, special liquidation, civil rehabilitation or corporate reorganization, or any grounds causing these events arise
(6) In case the other party passes a resolution for dissolution, or institutes a significant change in the other management structures, and
(7) In case Customer relocate the Product more than 50 km from the Installation site in the Individual Contract.

2. In case the Agreements is cancelled according to the preceding article, either party may make a claim for damages incurred thereby against the other party.
3. In case the Individual Contract is canceled or expired for any reasons, Article 12, Article 14, Article 15, Article 16, Article 17, Article 20, Article 21, Article 22, Article 23, and Article 24 shall survive and be still valid.

Article 20 (Maintenance of Confidentiality) Customer shall not disclose or leak any SAKI's trade or technical secrets which are knowable in relation to the Product, Individual Contract, or this Terms and Conditions to any third party during and after the period of the Individual Contract.

Article 21 (Liability) In any case, the maximum amount which SAKI burdens shall not exceed the purchase price of the Product which causes the damage.

2. SAKI shall not burden any liability of trouble and damage caused on an object other than the Product, indirect damage such as manufacturing loss, and the like.
3. Except for the extent that by statute liability may not lawfully be excluded, the whole liability which SAKI shall incur related to the Individual Contract and the Product shall be what is written specifically in this Terms and Conditions. SAKI, directly and indirectly, shall not be liable for any other matters against Customer.

Article 22 (Jurisdiction) As to any legal dispute arising with respect to the Individual Contract and this Terms and Conditions, the Tokyo District Court shall be designated as an exclusive agreement jurisdictional court of the first trial.

Article 23 (Consultation and Resolution) Matters arising any questions relating to this Terms and Conditions and the Individual Contract and matters not provided for in this Terms and Conditions and the Individual Contract shall be resolved through mutual consultation between Customer and SAKI.

Article 24 (Jurisdiction) As to any legal dispute arising with respect to this This Terms and Conditions and the Individual Contract, the Tokyo District Court shall be designated as an exclusive agreement jurisdictional court of the first trial.

Article 25 (Entire Agreement) This Terms and Conditions supersedes and cancels any and all previous agreements, contracts or understandings between the parties relating to the Product, the Service and expresses the complete and final agreement of the parties in respect thereof.

Article 26 (Severability) In any provision or any portion of any provision of this Terms and Conditions shall be held to be void or unenforceable, the remaining provisions of this Terms and Conditions and the remaining portion of any provision held void or enforceable in part shall continue in full force and effect.

January 1st, 2016

Saki Corporation

©2019 Saki Corporation. All rights reserved.

3D DPS optický inspekční system – zjednodušená standardní specifikace

3Di-LS2

©2019 Saki Corporation. All rights reserved.

1. 3Di-LS2 HW specifikace

Rozměry	1040 W x 1440 D x 1500 H mm (40.94 W x 56.69 D x 59.06 H in.) (*1)	
Výha	cca. 900 Kg (1984.16 lbs)	
Barva	Standard barva: Munsell N8.5	
	Munsell N7.5	
Použitelné v prostředí	5℃(59F) - 30℃(86F) / 15 - 80%RH	
Napájení		1-fáze ～200V - 240V+/-10%, 50/60Hz 700VA
		Kabeláž 5m s koncovkou
Hlučnost	60 dB(A)	
Vzduch	0.5 MPa @ ≥5L/min (ANR)	HIGH COUPLER 20PM (NITTO KOHKI)
DPS	Velikost DPS	7μm kamera: 50š x 60 d - 330 š x 330 d mm
		(1.97Wx2.36L–12.99Wx12.99L in.)
		12/18μm kamera: 50 š x 60 d - 500 š x 510 d mm
		(1.97Wx2.36L–19.68Wx20.07L in.)
	Tloušťka DPS	0.5 - 5.2 mm (0.02 - 0.20 in.) (*2)
	Váha DPS	12 kg (26.46 lbs) nebo méně
	Materiál	Skloepoxid, Papír Phenol, Keramika
	Prohnutí	7μm kamera: 1mm (0.019 in.) nebo méně
		12μm kamera: 2mm (0.039 in.) nebo méně
		18μm kamera: 5mm (0.078 in.) nebo méně
	Světlá výška	Vrchní: 40 mm (1.57 in.), Spodní: 60 mm (2.36 in.)
	Výchozí body	Jedna značka v rohu a druhá v opačném rohu
		(celkem 2 body nebo více)
Dopravník	Výška	880 - 965 mm (34.65 - 37.99 in.)
	Metoda	Dopravníkový řemen
	Přesun	S upravitelnou rychlostí
	Nastavení	Uchycení DPS podél šířky
		Šířka uchycení 3mm na každé straně
	Nastavení šířky	Automatické
	Směr pohybu	Z leva do prava / Z prava do leva
	Fixní kolejnice	1 (fixní)
	Nastavitelnost kolejnice	250 - 500 mm
	řemen	typ SE-A-PB (NITTA)

©2019 Saki Corporation. All rights reserved.

	Bod detekce DPS	Bod detekce šířky x 0.2[mm] od kolejnice

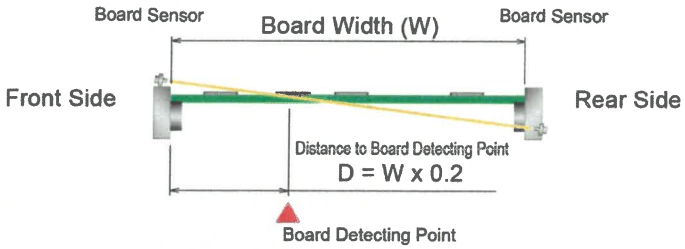

Optický systém	Osvětlení	2D: červená LED, zelená LED, modrá LED
		3D: bíla LED (pro profilometrii)
	Kamera	CMOS - 4 moire projekce
	Rozlišení	7μm, 12μm, 18μm
	Obraz	Zorné pole
	Velikost zorného pole	7μm kamera：22 Š x 29 D mm (0.87 x 1.14 in.)
		12μm kamera：36 Š x 42 D mm (1.42 x 1.65 in.)
		18μm kamera：41.5 Š x 41.5 D mm (1.63 W x 1.63 L in.)
Komunikační rozhraní	Síť I/F	Ethernet 1000BASE-T
Signalizace alarmu	model	LD6A-3KQW-RYGC (IDEC)
	Barva	červená, žlutá, zelená
	Zobrazení	zavislé na operačním módu
	operační mód	automatický start, konec, stop, manuální mód
	Zobrazení	Signální věž: světelná
Alarm	Zvukový	EB-1124 (Panasonic Electric Works)
Konektor		SMEMA (AMP) (*4)
Bezpečnostní prvky	Hlavní spínač	T0-1-102/EA/SVB-SW (Moeller, UL/CE mark compliance product)
		On lock and off lock are available.
	Dvěřní spínač	D4NS-1AF (OMRON, UL/CE mark compliance product)
	Bezpečnostní spínač	A22E-M-01 (OMRON, UL/CE mark compliance product)
	Jistič	NV30-FAU-2P-20A-240V-30mA
		(Mitsubishi Electric, UL/CE mark compliance product)
	Ventil zbytkového tlaku	HV6-02 (PISCO)

©2019 Saki Corporation. All rights reserved.

Specifikace PC	OS	Windows 10 IoT Enterprise 64bit English Edition (Microsoft) (*1)	
	Paměť	7μm : 64GB	
		12μm : 32GB	
		18μm : 32GB	
	CPU	Core i7-8700 3.2GHz (Intel) nebo vyšší	
	Hard Disk Drive	1TB×2 Raid 1	
	Pomocná jednotka	DVD-R/RW drive	
	Klávesnice	104 English keyboard	
	Myš	Optická Microsoft kompatibilní	
Displej	Velikost	24-inch LCD monitor	
	Rozlišení	WUXGA (1920×1200) 24-bit full color	
Samodiagnostika	přesnost, prediktivní a preventivní údržba		
Opce	Boční kamera	Kamera	4x CMOS plošná kamera
		Resolutio	18μm
		Obraz	zorné pole
		Zorné pole	36 W x 18 L mm (1.42 x 0.71 in.)
		Kontrola součástek:	J lead, QFN, Kryté konektory
		Inspekční kategorie	Bez pájky, málo pájky, mnoho pájky, zkrat
		Inspekční metoda	Inspekce probíhá okamžitě po získání obrazu zorného pole. Součástky, které nejsou vidizelné z vrchního pohledu jsou kontrolovány bočním pohledem.
		Inspekční obraz	Obraz pod úhlem s osvělením
Další opce	Bar-code čtečka		
	UPS	Založní zdroj na 10 minut provozu	

©2019 Saki Corporation. All rights reserved.

Podpůrné systémy	Konverze dat ODB++možnost
	BF2-Editor (offline program. SW)
	BF2-Monitor (SW pro stanici oprav)
	Multi Process View (Asistenční operátorský SW)
	BF-Logger (SW pro zpracování výstupních dat)
	BF-Manager (SW pro zpracování barkódů)
	BF Web Tracer II (traceability SW)

©2019 Saki Corporation. All rights reserved.

Rozměry

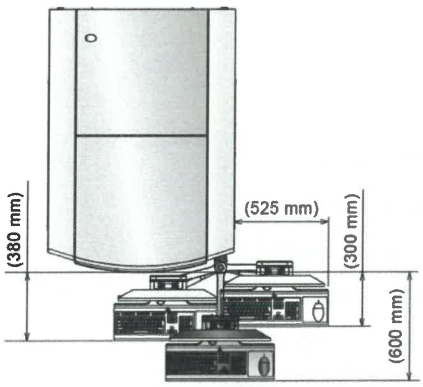

Top View

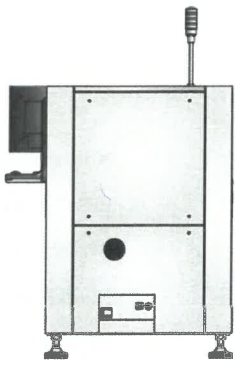

Rear View

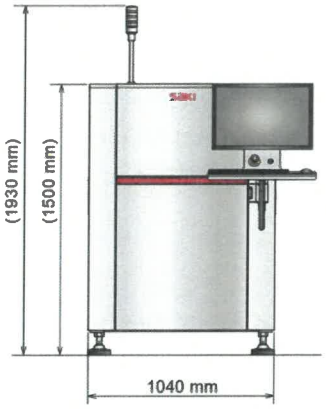

Front View

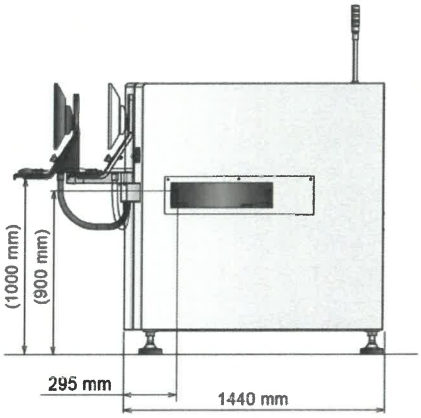

Side View

©2019 Saki Corporation. All rights reserved.

©2019 Saki Corporation. All rights reserved.

©2019 Saki Corporation. All rights reserved.

2. Inspekční možnosti

Proces	Osazené DPS před přetavením v peci nebo po přetavení v peci	
	Inspekce pájecí pasty po procesu nanesení pasty	
Inspekční rozsah	0201 mm (008004 in.)(7µm rozlišení kamery), 0402 mm (01005 in.) (12µm a 18µm rozlišení kamery), diody, tantalové kondenzátory, Al elektrolity, čipy, tranzistory, výkonové tranzistory, MELF, filtry, konektory (0.4mm), QFP, SOP, CSP, BGA (0.4mm), a pájené spoje viditelné z TOP pohledu	
Inspekční kategorie	přítomnost, poloha, nadzdvihnutí, otočení, polarita, můstek, přítomnost páj. pasty, množství pasty, nadzvihnuté vývody, natočení, meniskus páj. pasty, cízí materiály na DPS ad.	
Inspekční metoda	inspekce zorného pole kamery	
Inspekční obraz	Obraz je zachycen osvětlením v různých úhlech (RGB)	
Import dat	CAD data, osazovací data, nebo NC data	
Výchozí body	Tvar	kruh, čtverec, trojúhelník, Rhomboid
	Klakulace offsetů	dvojbodová nebo tříbodová
Čas taktu	A) získání obrazu	7µm kamera: Approx. 600 ms/FOV.
		12µm kamera : Approx. 420 ms/FOV
		18µm kamera: Approx. 300 ms/FOV
	(B) Najetí/vyjetí DPS	průměrně 4 sec.
Čas získání obrazu	7µm kamera:	1,063 mm^2/sec
	12µm kamera:	3,600 mm^2/sec
	18µm kamera:	5,700 mm^2/sec
Výška měření	7µm kamera:	4 mm (8.82 in.) or less
	12µm kamera:	10 mm (0.39 in.) or less
	18µm kamera:	20 mm (0.79 in.) or less
Měřící přesnost	Rozlišení	1µm
	Opakovatelnost měření	2µm (3σ) or less (*5)
	XY opakovatelnsot	3µm (3σ) or less
Schopnost		Cmk ≥ 2, Cpk ≥ 1,67

Výstup obrazu	Displej
Schopnost rozlišení	OCR funkce, 1D barkódy, 2D barkódy

©2019 Saki Corporation. All rights reserved.

3. Standartní příslušenství

Manuál a programovací manuál	1ks
USB klíče	2
Záloha disku	1
Externí HDD	1
Dopravníkový pás	2
Kabeláž pro komunikační rozhraní se stroji v lince (SMEMA)	1ks

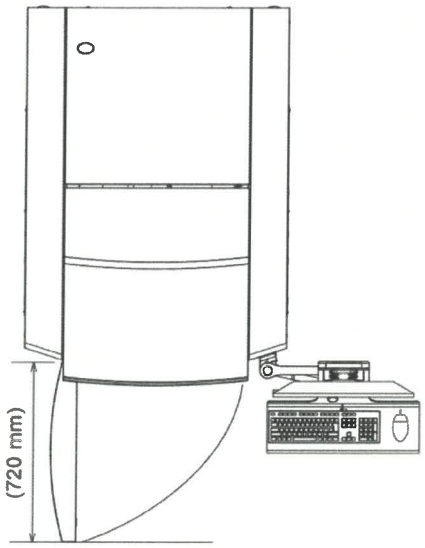

Top View

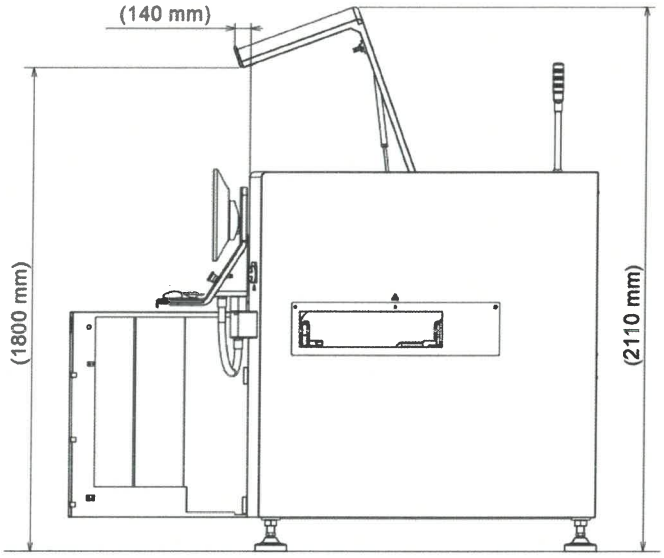

Side View

©2019 Saki Corporation. All rights reserved.

SAKI The Future in Focus

Gage R&R Results (Using ANOVA)

Measurement name	**R0603 inch – Shift Y [nm] GR&R**
Machine name	**N617A04**
Conducted by	**SAKI Europe GmbH**
Measurement date	3/8/2021 5:08:37 PM
Group/Board name	SAKI_DemoPCB / PCB01_Top

Source of variance	Variance	StdDev (SD)	Study Var (κ×SD)	% Study Var (%SD)	% of (USL-LSL)
GR&R	7745425.02963	2783.060371	14332.760912	17.271816	7.16638
- Machine (repeatability)	6774852.496296	2602.854682	13404.701613	16.15345	6.702351
- Lot (reproducibility)	970572.533333	985.176397	5073.658445	6.114055	2.536829
Interaction	2201135.15537	1483.622309	7640.654891	9.207436	3.820327
Board	249692031.885	15801.646493	81378.479438	98.065832	40.68924
Total	259638592.07	16113.304815	82983.519799	100	41.49176

Gage system works as expected.

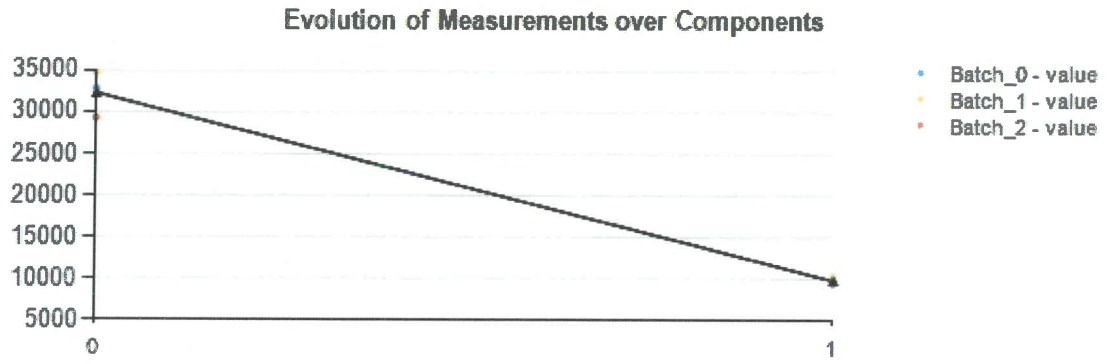

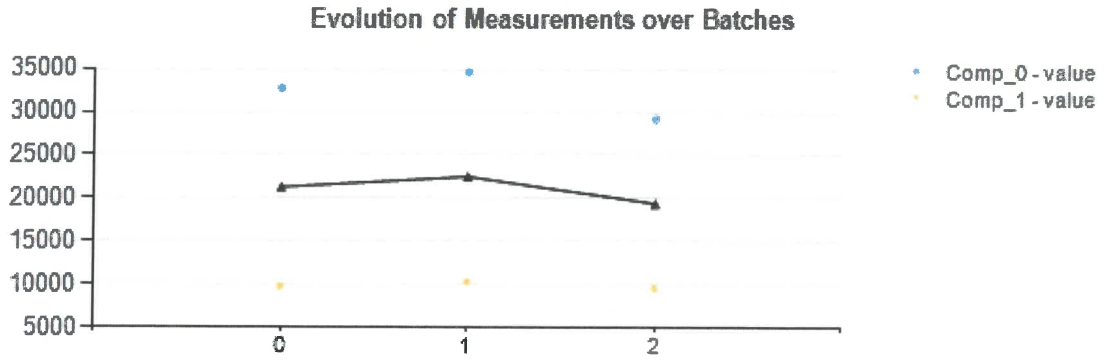

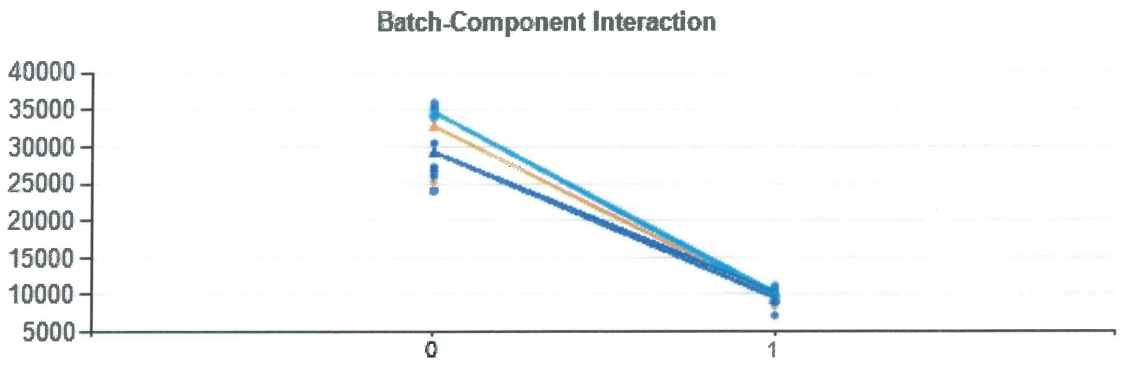

Appendix 1: ANOVA Results (Two-way with Replication)

Source of variance	Sum of squares	Degrees of freedom	Mean square	F-statistics	P-value
Board	7519547160.6	1	7519547160.6	261.220519	0
Lot	96395309.433333	2	48197654.716667	1.674332	0.197016
Interaction	57572408.1	2	28786204.05	4.248979	0.019331
Machine	365842034.8	54	6774852.496296	—	—
Total	8039356912.93333	59	—	—	—

Appendix 2: Measurement Data

Lot	Group2	Values (semicolon separated)
Batch_0	PCB_0	33918; 35585; 25509; 34279; 34284; 35719; 34977; 34404; 34115; 25297
	PCB_1	9651; 9324; 9717; 10972; 9424; 9989; 10475; 9694; 9929; 8353
Batch_1	PCB_0	35293; 35070; 34250; 35140; 35166; 33879; 34657; 34748; 34194; 34496
	PCB_1	9822; 9708; 11073; 11255; 10466; 11070; 8785; 10211; 9605; 11040
Batch_2	PCB_0	26673; 35347; 25960; 27286; 35946; 30514; 24124; 27133; 35688; 24112
	PCB_1	8944; 7172; 9385; 9271; 9585; 10124; 10949; 9605; 10053; 10418

SAKI The Future in Focus

Gage R&R výsledky (s využitím ANOVA)

Název měření	**R0603 inch – Shift Y [nm] GR&R**
Zařízení	**N617A04**
Provedeno	**SAKI Europe GmbH**
Datum	3/8/2021 5:08:37 PM
DPS název	SAKI_DemoPCB / PCB01_Top

Rozptyl	Rozptyl	StdOdch(SD)	Měření (κ×SD)	% Měření (%SD) (%SD)	% of (USL-LSL)
GR&R	7745425.02963	2783.060371	14332.760912	17.271816	7.16638
- Stroj (opakovatelnost)	6774852.496296	2602.854682	13404.701613	16.15345	6.702351
- Lot (reprodukovat.)	970572.533333	985.176397	5073.658445	6.114055	2.536829
Interakce	2201135.15537	1483.622309	7640.654891	9.207436	3.820327
Deska	249692031.885	15801.646493	81378.479438	98.065832	40.68924
Celkem	259638592.07	16113.304815	82983.519799	100	41.49176

Měřící systém pracoval dle předpokladů.

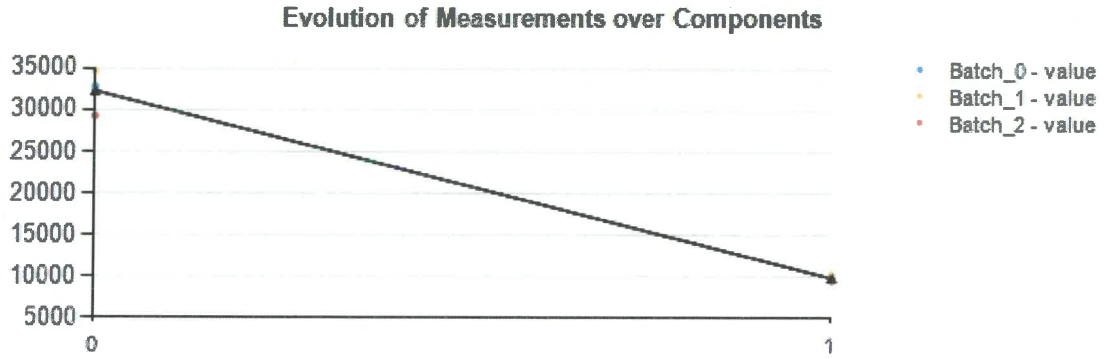

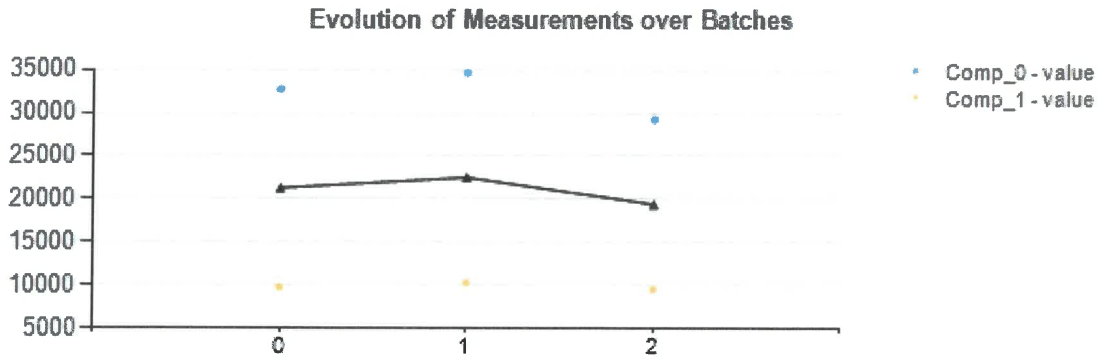

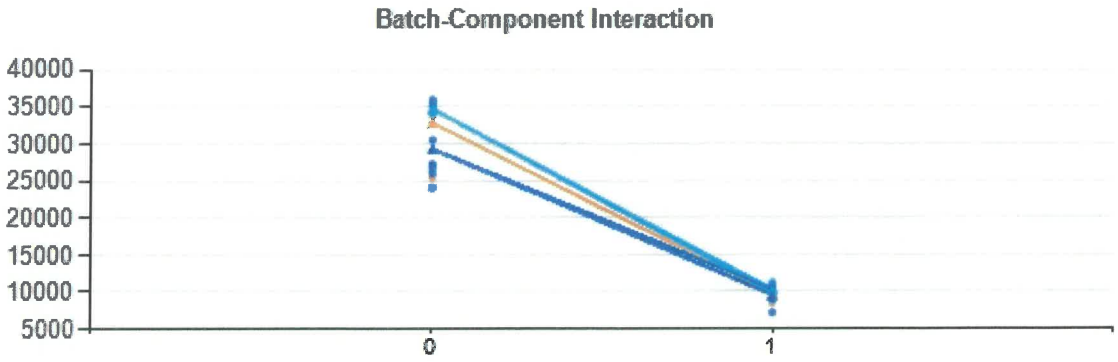

Příloha 1: ANOVA výsledky (Obousměrný s replikací)

Rozptyl	Součet čtverců	Stupně volnosti	Střed	F-statistika	P-hodnota
Deska	7519547160.6	1	7519547160.6	261.220519	0
Lot	96395309.433333	2	48197654.716667	1.674332	0.197016
Interakce	57572408.1	2	28786204.05	4.248979	0.019331
Stroj	365842034.8	54	6774852.496296	—	—
Celkem	8039356912.93333	59	—	—	—

Příloha 2: Měřená data

Lot	Skupina2	Hodonoty (semicolon separated)
Batch_0	PCB_0	33918; 35585; 25509; 34279; 34284; 35719; 34977; 34404; 34115; 25297
	PCB_1	9651; 9324; 9717; 10972; 9424; 9989; 10475; 9694; 9929; 8353
Batch_1	PCB_0	35293; 35070; 34250; 35140; 35166; 33879; 34657; 34748; 34194; 34496
	PCB_1	9822; 9708; 11073; 11255; 10466; 11070; 8785; 10211; 9605; 11040
Batch_2	PCB_0	26673; 35347; 25960; 27286; 35946; 30514; 24124; 27133; 35688; 24112
	PCB_1	8944; 7172; 9385; 9271; 9585; 10124; 10949; 9605; 10053; 10418

SAKI The Future in Focus

Gage R&R Results (Using ANOVA)

Measurement name	**R0603 inch – Shift X [nm] GR&R**
Machine name	**N617A04**
Conducted by	**SAKI Europe GmbH**
Measurement date	3/8/2021 5:08:37 PM
Group/Board name	SAKI_DemoPCB / PCB01_Top

Source of variance	Variance	StdDev (SD)	Study Var (κ×SD)	% Study Var (%SD)	% of (USL-LSL)
GR&R	10398282.990741	3224.636877	16606.879918	96.664308	**8.30344**
- Machine (repeatability)	10398282.990741	3224.636877	16606.879918	96.664308	**8.30344**
- Lot (reproducibility)	0	0	0	0	**0**
Interaction	662757.232593	814.099031	4192.610011	24.404087	**2.096305**
Board	67273.05	259.370488	1335.758013	7.775098	**0.667879**
Total	11128313.273333	3335.91266	17179.950198	100	**8.589975**

Gage system works as expected.

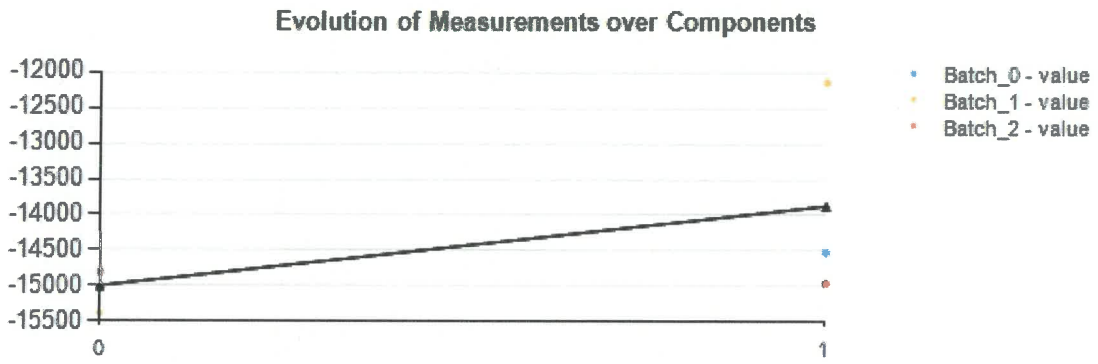

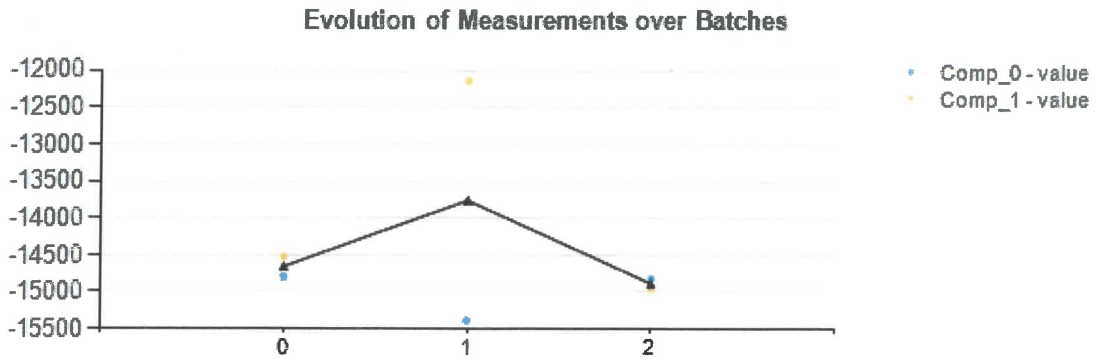

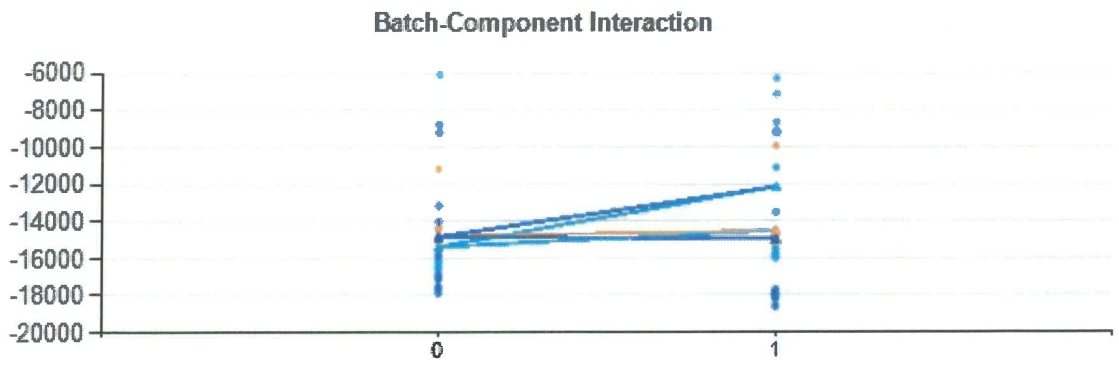

Appendix 1: ANOVA Results (Two-way with Replication)

Source of variance	Sum of squares	Degrees of freedom	Mean square	F-statistics	P-value
Board	19044046.816667	1	19044046.816667	1.118537	0.294942
Lot	14177449.233333	2	7088724.616667	0.416351	0.661548
Interaction	34051710.633333	2	17025855.316667	1.637372	0.203998
Machine	561507281.5	54	10398282.990741	—	—
Total	628780488.183333	59	—	—	—

Appendix 2: Measurement Data

Lot	Group2	Values (semicolon separated)
Batch_0	PCB_0	-15229; -15034; -16671; -14301; -14457; -14809; -17606; -14309; -14348; -11168
	PCB_1	-15483; -15284; -15263; -9943; -14694; -15062; -15212; -14538; -14575; -15160
Batch_1	PCB_0	-17033; -6077; -16184; -16406; -16747; -16222; -16554; -16498; -16143; -15960
	PCB_1	-11106; -6291; -9151; -15911; -16022; -15718; -15519; -15824; -8682; -7155
Batch_2	PCB_0	-17883; -15851; -9213; -17701; -17139; -13149; -16929; -8797; -14005; -17520
	PCB_1	-13487; -9211; -18595; -17897; -18083; -17940; -9247; -18182; -9200; -17705

SAKI The Future in Focus

Gage R&R výsledky (s využitím ANOVA)

Název měření	**R0603 inch – Shift X [nm] GR&R**
Zařízení	**N617A04**
Provedeno	**SAKI Europe GmbH**
Datum	3/8/2021 5:08:37 PM
DPS název	SAKI_DemoPCB / PCB01_Top

Rozptyl	Rozptyl	StdOdch(SD)	Měření (κ×SD) %	Měření (%SD) % (%SD)	% of (USL-LSL)
GR&R	10398282.990741	3224.636877	16606.879918	96.664308	**8.30344**
- Stroj (opakovatelnost)	10398282.990741	3224.636877	16606.879918	96.664308	**8.30344**
- Lot (reprodukovat.)	0	0	0	0	**0**
Interakce	662757.232593	814.099031	4192.610011	24.404087	**2.096305**
Deska	67273.05	259.370488	1335.758013	7.775098	**0.667879**
Celkem	11128313.273333	3335.91266	17179.950198	100	**8.589975**

Měřící systém pracoval dle předpokladů.

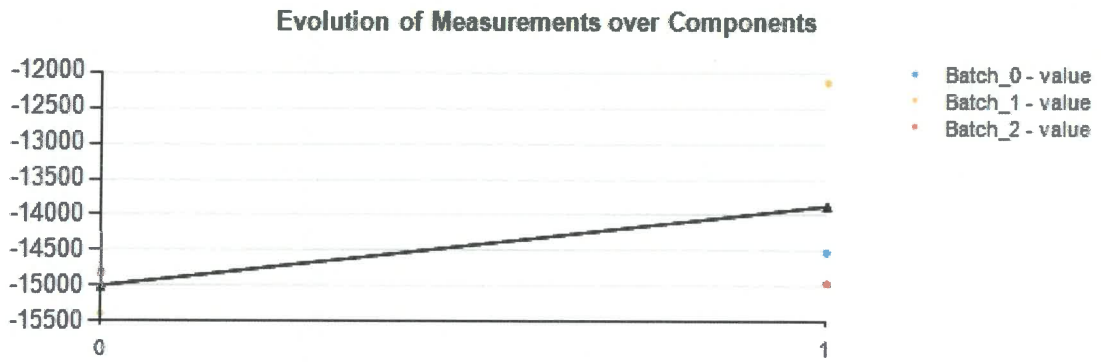

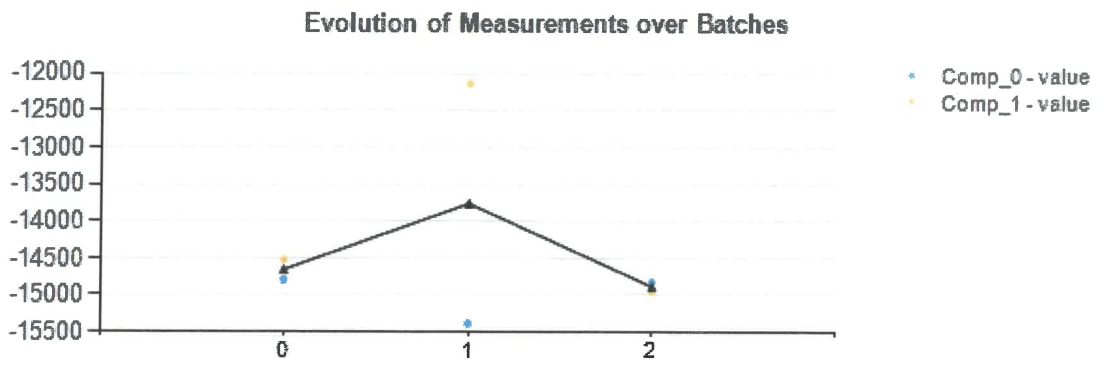

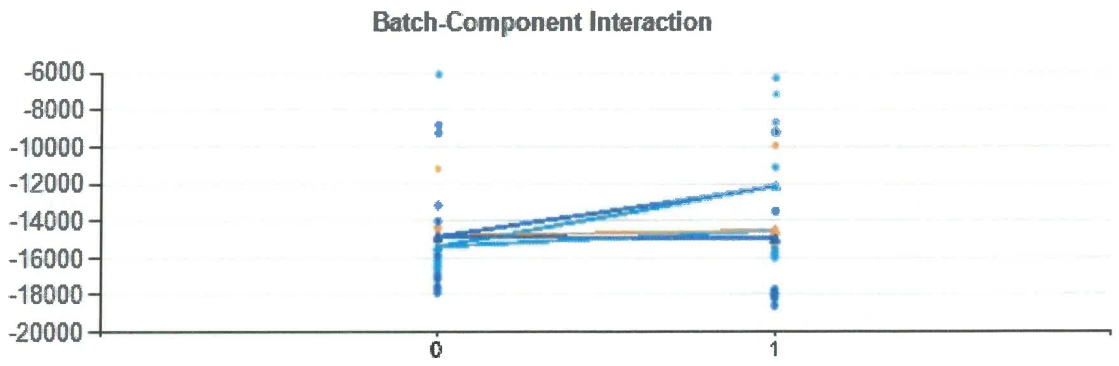

Příloha 1: ANOVA výsledky (Obousměrný s replikací)

Rozptyl	Součet čtverců	Stupně volnosti	Střed	F-statistika	P-hodnota
Deska	19044046.816667	1	19044046.816667	1.118537	0.294942
Lot	14177449.233333	2	7088724.616667	0.416351	0.661548
Interakce	34051710.633333	2	17025855.316667	1.637372	0.203998
Stroj	561507281.5	54	10398282.990741	—	—
Celkem	628780488.183333	59	—	—	—

Příloha 2: Měřená data

Lot	Skupina2	Hodnoty (semicolon separated)
Batch_0	PCB_0	-15229; -15034; -16671; -14301; -14457; -14809; -17606; -14309; -14348; -11168
	PCB_1	-15483; -15284; -15263; -9943; -14694; -15062; -15212; -14538; -14575; -15160
Batch_1	PCB_0	-17033; -6077; -16184; -16406; -16747; -16222; -16554; -16498; -16143; -15960
	PCB_1	-11106; -6291; -9151; -15911; -16022; -15718; -15519; -15824; -8682; -7155
Batch_2	PCB_0	-17883; -15851; -9213; -17701; -17139; -13149; -16929; -8797; -14005; -17520
	PCB_1	-13487; -9211; -18595; -17897; -18083; -17940; -9247; -18182; -9200; -17705

SAKI The Future in Focus

Gage R&R Results (Using ANOVA)

Measurement name	**R0603 inch – Height GR&R**
Machine name	**N617A04**
Conducted by	**SAKI Europe GmbH**
Measurement date	3/8/2021 5:08:37 PM
Group/Board name	SAKI_DemoPCB / PCB01_Top

Source of variance	Variance	StdDev (SD)	Study Var (κ×SD)	% Study Var (%SD)	% of (USL-LSL)
GR&R	0.738272	0.859227	4.425021	3.937986	**8.850042**
- Machine (repeatability)	0.738272	0.859227	4.425021	3.937986	**8.850042**
- Lot (reproducibility)	0	0	0	0	**0**
Interaction	8.19784	2.863187	14.745413	13.122477	**29.490826**
Board	467.130556	21.613203	111.307997	99.057018	**222.615994**
Total	476.066667	21.818952	112.367603	100	**224.735206**

Gage system works as expected.

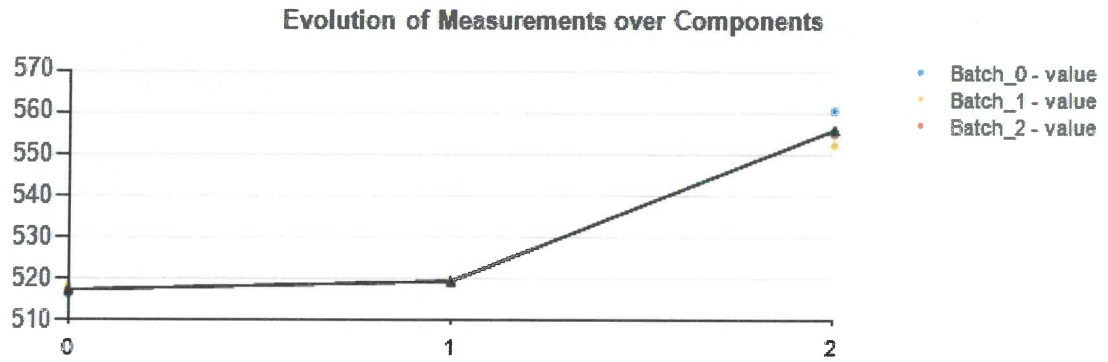

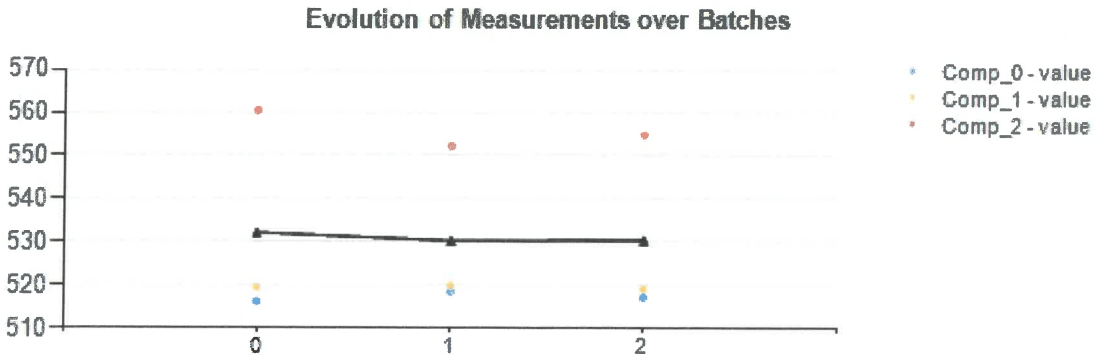

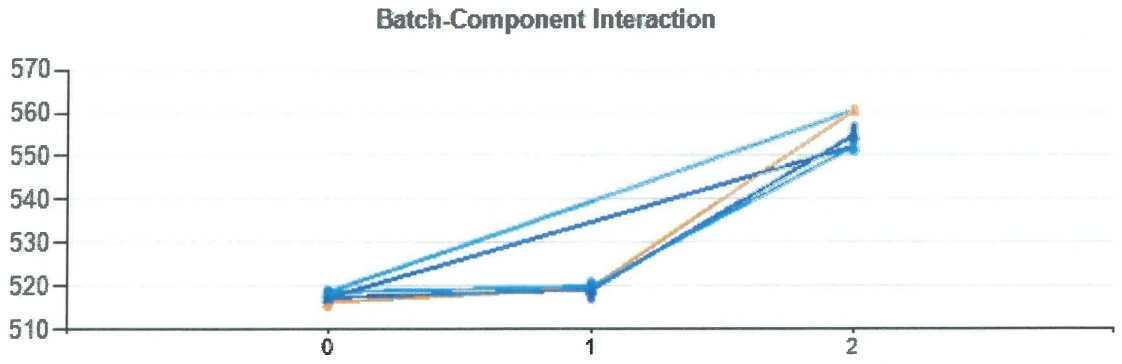

Appendix 1: ANOVA Results (Two-way with Replication)

Source of variance	Sum of squares	Degrees of freedom	Mean square	F-statistics	P-value
Board	28193.266667	2	14096.633333	170.420713	0
Lot	61.666667	2	30.833333	0.372758	0.690007
Interaction	330.866667	4	82.716667	112.04097	0
Machine	59.8	81	0.738272	—	—
Total	28645.6	89	—	—	—

Appendix 2: Measurement Data

Lot	Group2	Values (semicolon separated)
Batch_0	PCB_0	516; 517; 516; 515; 515; 517; 517; 516; 517; 516
	PCB_1	519; 520; 519; 518; 519; 520; 520; 519; 521; 520
	PCB_2	561; 560; 561; 560; 560; 561; 561; 560; 561; 561
Batch_1	PCB_0	519; 518; 518; 519; 518; 519; 519; 518; 519; 519
	PCB_1	520; 520; 520; 520; 519; 521; 520; 518; 520; 521
	PCB_2	551; 551; 552; 553; 552; 554; 552; 551; 553; 554
Batch_2	PCB_0	517; 516; 517; 518; 517; 517; 517; 518; 519; 517
	PCB_1	519; 517; 519; 519; 519; 519; 520; 519; 520; 520
	PCB_2	554; 554; 556; 555; 554; 554; 556; 554; 557; 555

SAKI The Future in Focus

Gage R&R výsledky (s využitím ANOVA)

Název měření	**R0603 inch – Height GR&R**
Zařízení	**N617A04**
Provedeno	**SAKI Europe GmbH**
Datum	3/8/2021 5:08:37 PM
DPS název	SAKI_DemoPCB / PCB01_Top

Rozptyl	**Rozptyl**	**StdOdch (SD)**	**Měření (κ×SD) %**	**Měření (%SD) %**	**(USL-LSL)**
GR&R	0.738272	0.859227	4.425021	3.937986	**8.850042**
- Stroj (opakovatelnost)	0.738272	0.859227	4.425021	3.937986	**8.850042**
- Lot (reprodukovat.)	0	0	0	0	**0**
Interakce	8.19784	2.863187	14.745413	13.122477	**29.490826**
Deska	467.130556	21.613203	111.307997	99.057018	**222.615994**
Celkem	476.066667	21.818952	112.367603	100	**224.735206**

Měřící systém pracoval dle předpokladů.

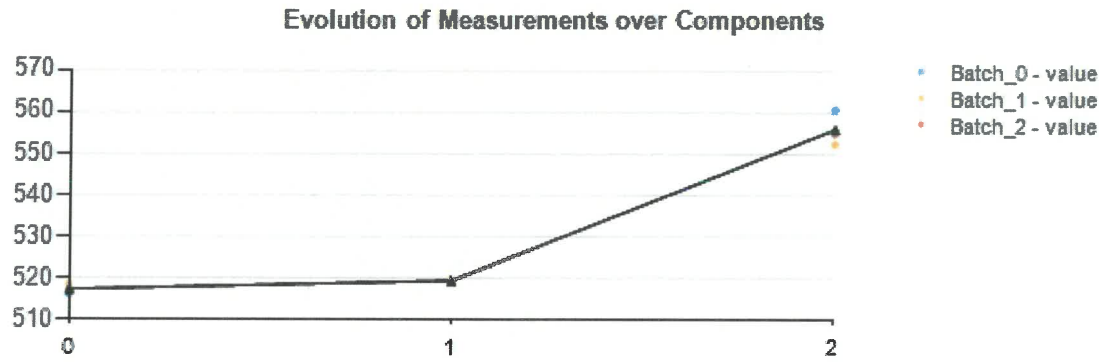

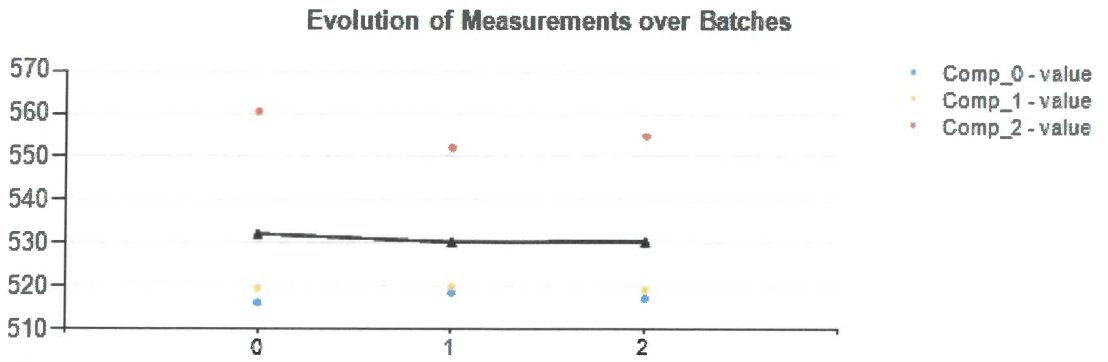

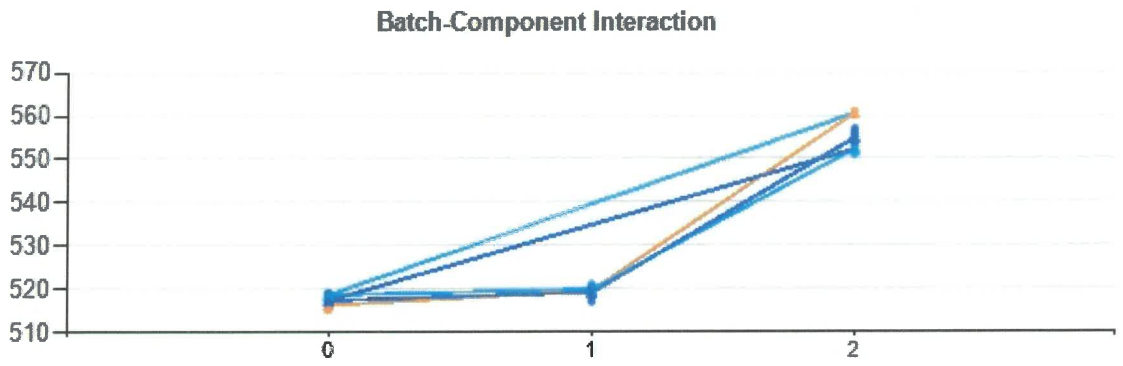

Příloha 1: ANOVA výsledky (Obousměrný s replikací)

Rozptyl	Součet čtverců	Stupně volnosti	Střed	F-statistika	P-hodnota
Deska	28193.266667	2	14096.633333	170.420713	0
Lot	61.666667	2	30.833333	0.372758	0.690007
Interakce	330.866667	4	82.716667	112.04097	0
Stroj	59.8	81	0.738272	—	—
Celkem	28645.6	89	—	—	—

Příloha 2: Měřená data

Lot	Skupina2	Hodnoty (semicolon separated)
Batch_0	PCB_0	516; 517; 516; 515; 515; 517; 517; 516; 517; 516
	PCB_1	519; 520; 519; 518; 519; 520; 520; 519; 521; 520
	PCB_2	561; 560; 561; 560; 560; 561; 561; 560; 561; 561
Batch_1	PCB_0	519; 518; 518; 519; 518; 519; 519; 518; 519; 519
	PCB_1	520; 520; 520; 520; 519; 521; 520; 518; 520; 521
	PCB_2	551; 551; 552; 553; 552; 554; 552; 551; 553; 554
Batch_2	PCB_0	517; 516; 517; 518; 517; 517; 517; 518; 519; 517
	PCB_1	519; 517; 519; 519; 519; 519; 520; 519; 520; 520
	PCB_2	554; 554; 556; 555; 554; 554; 556; 554; 557; 555

SAKI
The Future in Focus

Landsberger Str. 183, D80687 München, GERMANY
Tel: +49 893 090 469 -0
Fax: +49 893 090 469 -99

LETTER OF STATEMENT

09th August 2021

To: **AMTECH, Spol s.r.o.,**
Bohuslava Martinů 941/41b
602 00 Brno

Item: **Machine capability by Gage R&R compliance**

To whomever it may concern,

SAKI Corporation hereby declares that SAKI 3D AOI/SPI systems, model lineup **3Di-LS2/3Si-LS2,** are in standard production environment and standard machine conditions and in accordance with related machine standard specifications (**SJ3903DCSA** / **SJ3908DCSA**) and its inspection targets, able to fulfill Gage Repeatability & Reproducibility criteria given by common industry requirements for AOI/SPI inspection machines.

Related Gage Repeatability & Reproducibility (ANOVA method) analysis requirements:

- Gage R&R analysis with results, **% GR&R ≤ 10**
- Number of distinct categories for Gage R&R analysis, **ndc ≥ 5**

Above mentioned analysis is performed by SAKI Corporation as a regular release process for given machine model and every manufactured unit of the same model complies given standards within the scope of use in accordance with its specification.

Sincerely,

Martin Kostadinov
Technology Sales Manager
SAKI Europe GmbH

SAKI
The Future in Focus

LS20210309_MK

SAKI
The Future in Focus
Landsberger Str. 183, D80687 München, GERMANY
Tel: +49 893 090 469 -0
Fax: +49 893 090 469 -99

PROHLÁŠENÍ

9.8.2021

To: **AMTECH, Spol s.r.o.,**
Bohuslava Martinů 941/41b
602 00 Brno

Item: **Způsobilost zařízení ve shodě se studií "Gage R&R"**

Všem zúčastněným,

Společnost **SAKI Corporation** tímto prohlašuje, že její zařízení automatické optické inspekce (dále **AOI**) resp. zařízení automatické inspekce potisku pájecí pastou (dále **SPI**), modelová řada **3Di-LS2 resp. 3Si-LS2,** jsou ve standardním výrobním porstředí, za standardních výrobních podmínek a pro deklarované inspekční cíle dle standardní specifikace výrobce těchto zařízení (**SJ3903DCSA** / **SJ3908DCSA**), schopna naplnit obvyklá kritéria studie opakovatelnosti a repredukovatelnosti (dále "Gage R&R příp. GR&R") pro průmyslová kontrolní zařízení AOI/SPI.

Vztažené požadavky pro studii "Gage R&R" (metoda ANOVA):

- Gage R&R s výsledkem, **% GR&R ≤ 10**
- Počet rozlišitelných kategorií výsledku "Gage R&R", **ndc ≥ 5**

Výše zmíněná studie je prováděna spol. SAKI Corporation jakožto standardní proces pro uvolnění dané modelové řady pro sériovou výrobu a každá vyrobená jednotka odpovídá nárokům této studie při použití ve shodě se standadní specifikací zařízení.

S pozdravem,

Martin Kostadinov
Technology Sales Manager
SAKI Europe GmbH

SAKI
The Future in Focus

LS20210309_MK-CZ

Amtech

Věc:
Vysvětlení

Název zakázky: „Inteligentné inovácie vo výrobe CRT ELECTRONIC s.r.o."

Níže uvádíme vysvětlení / doplnění k jednotlivým bodům:

Bod:
1: Na základe vyhodnotenia ponúk pre hore uvedený predmet zákazky pre časť 1: 3D_automatický optický inšpekčný systém (AOI), evidujeme nesúlad v technickom parametre „Hrúbka DPS ≥0,4mm" medzi hodnotou uvedenou v „Opise predmetu zákazky" = Tloušťka 0,4 – 5,2 mm a „Technickým listom" = Tloušťka 0,5 – 5,2 mm

Žiadame Vás o vysvetlenie resp. doplnenie hore uvedeného bodu. Pričom Vami ponúkaná cena musí zostať nezmenená.

Vysvětlení:
Cena za zařízení zahrnuje také „option", které jsou uvedeny v tech. listu na straně 5. Tyto rozšíření umožňují tloušťku ≥0,4mm:

- Point sub backupFor large board (Support the middle of PCB with 2 points.)
- Line sub backupFor large board (Support the middle of PCB with plate.)

Níže také posíláme čestné prohlášení.

ČETSNÉ PROHLÁŠENÍ

Uchazeč: AMTECH, spol. s r.o.
Sídlo: Bohuslava Martinů 941/41b, 602 00 Brno
IČO: 47905085
DIČ: CZ47905085

Čestně prohlašuji, že technologické zařízení 3Di-LS2, které nabízíme pro plnění části zakázky:
I. časť zákazky:
3D_automatický optický inšpekčný systém (AOI)
Splňuje technologický požadavek a parametr:

„Hrúbka DPS ≥0,4mm "

V Buchlovicích dne 3.9.2021

.....
Radek Nekarda, jednatel

Amtech
AMTECH, spol. s r.o.
Bohuslava Martinů 941/41b
602 00 Brno
IČ: 47905085
DIČ: CZ47905085

Amtech

Seznam servisních techniků a objem tržeb za servis

Uchazeč: AMTECH, spol. s r.o.
Sídlo: Bohuslava Martinů 941/41b, 602 00 Brno
IČO: 47905085
DIČ: CZ47905085

Seznam servisních techniků:

Jiří Frimmel (FUJI, MPM)
- Pracovní pozice : servisní technik
- Zaměstnancem firmy AMTECH od 1.7.2018
- Postupně absolvoval odborné servisní školení na technologie během roku 2018 a 2019 až do současnosti na nové modely a verze strojů

Tomáš Peřina (FUJI, MPM)
- Pracovní pozice : servisní technik
- Zaměstnancem firmy AMTECH od 1.10.2011
- Postupně absolvoval odborné servisní školení na technologie během roku 2012 až do současnosti na nové modely a verze strojů

Peter Hovanec (FUJI, MPM)
- Pracovní pozice : servisní technik
- Zaměstnancem firmy AMTECH od 1.11.2015
- Postupně absolvoval odborné servisní školení na technologie během roku 2016 až do současnosti na nové modely a verze strojů

René Kolka (FUJI, SAKI)
- Pracovní pozice : servisní technik
- Zaměstnancem firmy AMTECH od 1.7.2016
- Postupně absolvoval odborné servisní školení na technologie během roku 2016 a 2017 až do současnosti na nové modely a verze strojů

Vlastimil Korčák (SAKI, MPM)
- Pracovní pozice : servisní technik
- Zaměstnancem firmy AMTECH od 20.8.2010
- Postupně absolvoval odborné servisní školení na technologie během roku 2010 a 2011 do současnosti na nové modely a verze strojů

Martin Zouhar (SAKI, MPM)
- Pracovní pozice : servisní technik
- Zaměstnancem firmy AMTECH od 1.5.2018
- Postupně absolvoval odborné servisní školení na technologie během roku 2018 a 2019 do současnosti na nové modely a verze strojů

Tomáš Kolesa (MPM)
- Pracovní pozice : servisní technik
- Zaměstnancem firmy AMTECH od 1.8.2016
- Postupně absolvoval odborné servisní školení na technologie během roku 2016 a 2017 do současnosti na nové modely a verze strojů

Amtech

Objem tržeb za servisní služby:

SAKI (Časť I. zákazky / časť Ii. zákazky)

- 2018: 338 000,00 Kč
- 2019: 411 000,00 Kč
- 2020: 154 000,00 Kč

FUJI (Časť IV. zákazky)

- 2018: 1113 000,00 Kč
- 2019: 1 347 000,00 Kč
- 2020: 675 000,00 Kč

MPM (Časť III. zákazky)

- 2018: 476 000,00 Kč
- 2019: 542 000,00 Kč
- 2020: 364 000,00 Kč

ČETSNÉ PROHLÁŠENÍ

Uchazeč: AMTECH, spol. s r.o.
Sídlo: Bohuslava Martinů 941/41b, 602 00 Brno
IČO: 47905085
DIČ: CZ47905085

Čestně prohlašuji,
že informace o servisních technicích byly platné při podání nabídky dne 9.8.2021, před podpisem smlouvy o díle dne 29.9.2021 a požadovaná servisní podpora strojů a zařízení a servisní technici budou k dispozici v čase plnění smlouvy.

V Buchlovicích dne 14.12.2021

.....
Radek Nekarda, jednatel

Amtech
AMTECH, spol. s r.o.
Bohuslava Martinů 941/41b
602 00 Brno
IČ: 47905085
DIČ: CZ47905085